Meijer.com

USER'S MANUAL

SMOOTH AGILE DMT X2

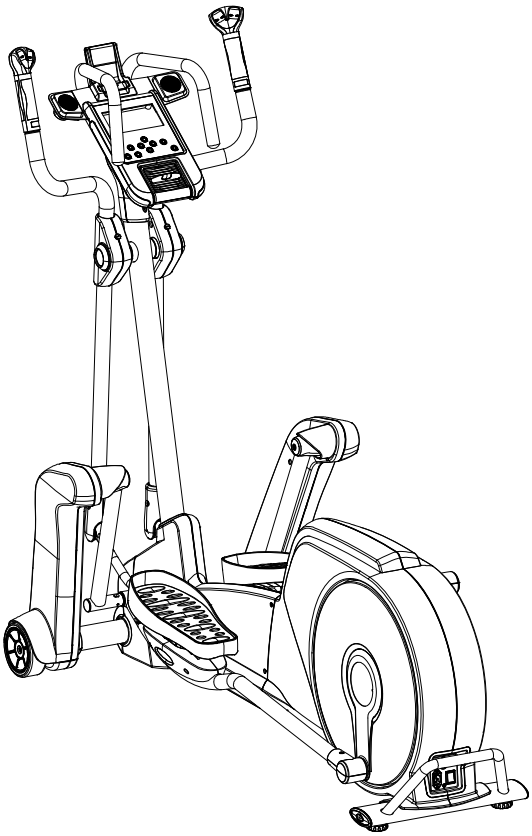

USER WEIGHT LIMITATION: **350lbs(160kgs).**

SERIAL NUMBER (found on frame):

ST-MNL-X2-SMUS-01

Meijer.com

PREASSEMBLY

For future service or related questions:

Please staple your receipt and/or write in the name and phone number of the retail store where you purchased your Smooth Fitness AGILE DMT X2.

Name: _____ Phone Number: _____ Receipt: _____

Open the boxes:

You are now ready to open the boxes of your new equipment. Make sure to inventory all of the parts that are included in the boxes. Check the Parts List for a full count of the number of parts included for this product to be assembled properly. If you are missing any parts or have any assembly questions call your local dealer or contact us directly at 888-800-1167.

Gather your tools:

Before starting the assembly of your unit, make sure that you have gathered all the necessary tools you may require to assemble the unit properly. Having all of the necessary equipment at hand will save time and make the assembly quick and hassle-free.

Clear your work area:

Make sure that you have cleared away a large enough space to properly assemble the unit. Make sure the space is free from anything that may cause injury during assembly. After the unit is fully assembled, make sure there is a comfortable amount of free area around the unit for unobstructed operation.

Invite a friend:

Some of the assembly steps may require heavy lifting. It is recommended that you obtain the assistance of another person when assembling this product.

User Weight Limitation:

Please note that there is a weight limitation for this product. If you weigh more than 350lbs. it is not recommended that you use this product. Serious injury may occur if the user's weight exceeds the limit shown here. This product is not intended to support users whose weight exceeds this limit.

Meijer.com

POWER REQUIREMENTS

Power Requirements:

IMPROPER CONNECTION OF THE EQUIPMENT GROUNDING CONNECTOR CAN RESULT IN THE RISK OF AN ELECTRIC SHOCK. CHECK WITH A QUALIFIED ELECTRICIAN OR SERVICE MAN IF YOU ARE IN DOUBT AS TO WHETHER THE PRODUCT IS PROPERLY GROUNDED. DO NOT MODIFY THE PLUG PROVIDED WITH THE PRODUCT, IF IT WILL NOT FIT THE OUTLET; HAVE A PROPER OUTLET INSTALLED BY A QUALIFIED ELECTRICIAN.

This AGILE Trainer can be seriously damaged by sudden voltage changes in your home's electrical power. Voltage spikes, surges and noise interference can result from weather conditions or from other appliances being turned on or off. To reduce the possibility of AGILE Trainer damage, always use a surge protector (not included) with your AGILE Trainer.

Surge protectors can be purchased at most hardware stores. The manufacturer recommends a single outlet surge protector with a UL 1449 rating as a Transient Voltage Surge Suppressor (TVSS) with a UL suppressed voltage rating of 400V or less and an electrical rating 110VAC, 15 amps.

This AGILE Trainer must be grounded to reduce the risk of electrical shock. Grounding provides a path of least resistance for electric current, should the AGILE Trainer malfunction. This AGILE Trainer is equipped with an electrical cord that has an equipment-grounding conductor and a grounding plug. Always plug the power cord into a surge protector, and plug the surge protector into an appropriate outlet that is properly installed and grounded in accordance with all local codes and ordinances.

This product is for use on a nominal 110-volt circuit, and has a grounding plug that looks like the plug illustrated in the drawing below.
GFCI outlets and GFCI Circuit Breakers are NOT recommended for use on this product. GFCI outlets and GFCI Circuit Breakers may cause this equipment to function improperly.

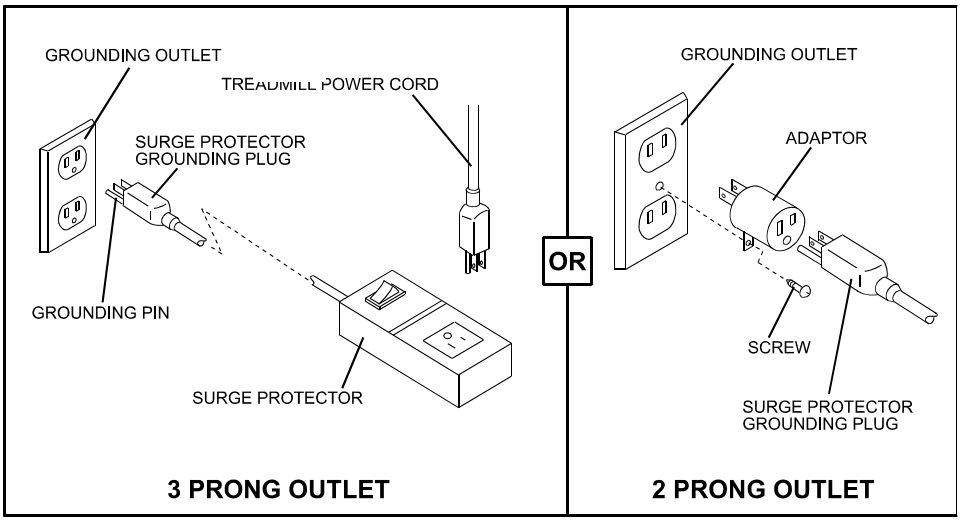

Meijer.com

SUPPLIED COMPONENTS

This list identifies the major components you will use to assemble this product.

No.	Description	Qty.
A1	Handlebar Assembly – Left	1
A2	Console Assembly	1
A3	Handlebar Assembly – Right	1
A4	Main Frame Assembly	1
A5	Incline Frame Assembly	1
A6	Computer Assembly	1
701	Action Handlebar Lower Cover	4
702	Pedal Arm Front Pivot Cover	2
703	Incline Frame Cover	1
704	Undercarriage Cover - Left	1
705	Undercarriage Cover - Right	1
706	Nylon Bushing	2
707	Action Handlebar Cap	2
708	Incline Frame Holder – Front	2
709	Console Support Tube Cover – Rear	1
710	Console Support Tube Cover – Front	1
F	Chest Belt (optional)	1
G	Power Cord	1

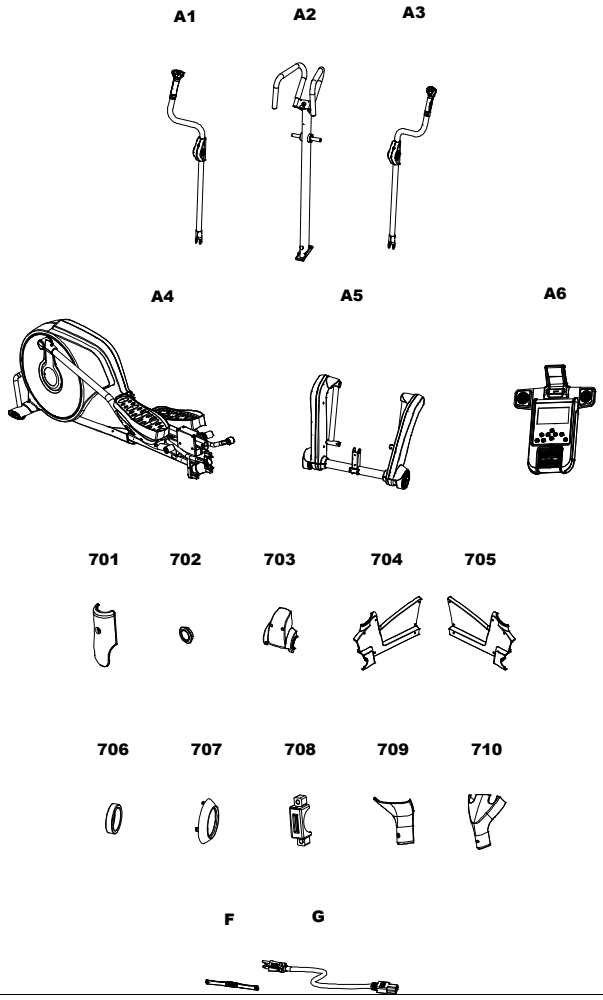

Meijer.com

SUPPLIED HARDWARE

This list identifies the hardware you will use to assemble the product. To help distinguish between the various types of screws and bolts, use the scale below to measure them and compare them to the sizes listed.

No.	Description	Qty.
501	4 x 12mm Screw – Cone Point	4
502	15 x 22 – M8 x 10mm Bolt	2
503	15 x 26 – M8 x 15mm Bolt	2
504	M8 x 16mm Allen Head CAP Bolt	4
505	20 x 78 – M14 x 35mm Bolt	2
506	4 x 12mm Screw – Flat Point	4
507	M10 x 56mm Allen Head Bolt	1
508	M10 Nylon Nut	1
509	4x 19mm Screw	3
510	4.5 x 15mm Screw	6
511	M10 x 40mm Allen Head CAP Bolt	4
513	8 x 27 x 2mm Washer	2
514	8mm Spring Washer	2
515	M8 x 20mm Allen Head Bolt	2
516	M5 x 6mm Screw	2
517	10 x 16 x T2.0mm Spring Washer	4
518	M5 x 12mm Screw	2
519	4 x 12mm Screw – Plat Point	2
A	2.5mm Allen Key	1
B	6mm Allen Key	1
C	8mm Allen Key	1
D	Wrench	1
E	Screwdriver	1

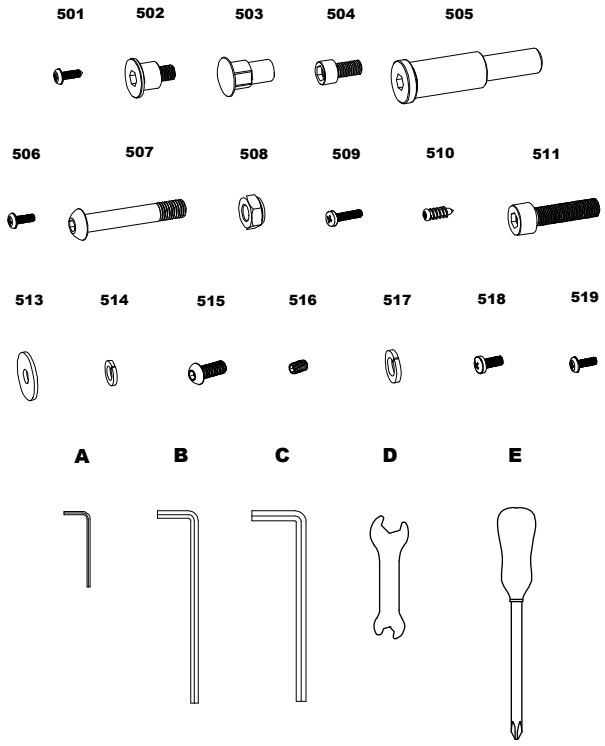

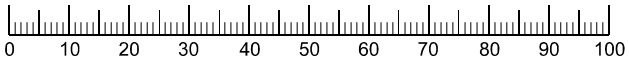

MILLIMETERS

Meijer.com

COMPLETE PARTS LIST

Item No.	Description	Qty.	Part No.
100			
101	Console Support Tube	1	X2-101
102	Action Handlebar – Left	1	X2-102
103	Action Handlebar – Right	1	X2-103
104	Moving Linkage – Left	1	X2-104
105	Moving Linkage – Right	1	X2-105
106	Pedal Arm – Left	1	X2-106
107	Pedal Arm – Right	1	X2-107
108	Pedal Swing Arm	2	X2-108
109	Incline Frame	1	X2-109
110	Incline Transmission Tube-Front	1	X2-110
111	Incline Transmission Tube-Back	1	X2-111
112	Main Frame	1	X2-112
113	Cover Support Tube	1	X2-113
114	Electro-magnetic System Bracket	1	X2-114
115	Tension Wheel Bracket	1	X2-115
116	Pedal Support Base	2	X2-116
117	Pedal Buffer Set	2	X2-117
200			
201	Handlebar Foam Grip	2	X2-201
202	Handlebar Cap	2	X2-202
203	Hand Pulse Sensor Back Cover	2	X2-203
204	Hand Pulse Sensor Cover	2	X2-204
206	Incline Frame Holder – Rear	2	X2-206
210	Bearing 6004	4	X2-210
211	Bearing 2201	2	X2-211
212	Bearing 608zz	8	X2-212
213	Moving Linkage Bushing	4	X2-213
214	Bearing 6804	4	X2-214
215	Bearing 2203	2	X2-215
216	Pedal Fixing Base	4	X2-216
217	Bearing 6205	4	X2-217
218	Bushing 25.6 x 28.6 x 50mm	2	X2-218
219	Bushing 16 x 22.2 x 10.7mm	4	X2-219
220	Bushing 18 x 12mm	2	X2-220
221	Flywheel Pivot	1	X2-221
222	Bearing 6003	2	X2-222
223	Aluminum Disk	1	X2-223
224	Flywheel	1	X2-224
225	Bearing 6300	2	X2-225

Meijer.com

COMPLETE PARTS LIST

Item No.	Description	Qty.	Part No.
226	Crank	2	X2-226
227	Crank Disk	1	X2-227
228	Crank Disk Oval Cap	2	X2-228
229	Crank Axle Bushing	2	X2-229
230	Bearing 6005	2	X2-230
231	Crank Disk Axle	1	X2-231
232	Bearing Holder	1	X2-232
233	Belt	1	X2-233
234	Level Adjuster	2	X2-234
235	Control Board Base	1	X2-235
236	Speed Sensor Base	1	X2-236
237	Overlay	1	X2-237
238	Speaker Bracket	1	X2-238
300			
301	Console Housing - Upper	1	X2-301
302	Console Side Cover	1	X2-302
303	Fan Cover – Top	1	X2-303
304	Fan Cover – Bottom	1	X2-304
305	Blade	1	X2-305
306	Fan Holder Ring	2	X2-306
307	Console Housing – Bottom	1	X2-307
310	Console Top Cover	1	X2-310
311	Pivot Cap	2	X2-311
312	Pivot Arm Bottom Cover – Left	1	X2-312
313	Pivot Arm Bottom Cover – Right	1	X2-313
314	Dock Cover – Top	1	X2-314
315	Action Handlebar Cover – LL	1	X2-315
316	Action Handlebar Cover – LR	1	X2-316
317	Action Handlebar Cover – RL	1	X2-317
318	Action Handlebar Cover – RR	1	X2-318
319	Switch Plate	1	X2-319
320	Pedal Soft Cushion	2	X2-320
321	Pedal	2	X2-321
322	Rubber Cushion – Front	2	X2-322
323	Rubber Cushion – Rear	2	X2-323
324	Pedal Bushing Cover	4	X2-324
325	Pedal Arm Cover – Top	2	X2-325
326	Pedal Arm Cover – Bottom	2	X2-326
327	Crank Disk Cover	2	X2-327
328	Crank Cover	2	X2-328

Meijer.com

COMPLETE PARTS LIST

Item No.	Description	Qty.	Part No.
329	Pedal Swing Arm Cap	2	X2-329
330	Incline Frame Positioner	1	X2-330
331	Wheel Cap 112 x 41.5mm	2	X2-331
332	Wheel Cap 46 x 12mm	2	X2-332
333	Wheel 140 x 51.86mm	2	X2-333
334	Bearing Bracket	2	X2-334
335	Control Board Cover	1	X2-335
336	Oval Tube Cap	2	X2-336
337	Rear Cover – Left	1	X2-337
338	Rear Shroud – Left	1	X2-338
339	Rear Shroud – Right	1	X2-339
340	Rear Cover –Right	1	X2-340
341	Pivot Arm Cover – LL	1	X2-341
342	Pivot Arm Cover – LR	1	X2-342
343	Pivot Arm Cover – RL	1	X2-343
344	Pivot Arm Cover – RR	1	X2-344
345	Speaker Cover	2	X2-345
346	Pad	1	X2-346
347	iPod Bracket	1	X2-347
348	Speaker Bracket Cover	1	X2-348
349	Dock Cover – Bottom	1	X2-349
400			
401	4 x 12mm Screw	6	X2-401
402	3 x 10mm Screw	6	X2-402
403	Taper Fixing Insert	27	X2-403
404	M8 x 16mm Allen Head CAP Bolt	4	X2-404
405	8 x 14 x T2.0mm Spring Washer	9	X2-405
406	M10 x 20mm Allen Head Cap Bolt	4	X2-406
407	4 x 19mm Screw	13	X2-407
408	4 x 15mm Screw – Cone Point	2	X2-408
409	4 x 12mm Screw – Flat Point	4	X2-409
410	M5 x 12mm Screw	8	X2-410
411	4 x 12mm Screw – Cone Point	21	X2-411
412	M32 C Clip	2	X2-412
413	12 x 20 x 2mm PU Washer	2	X2-413
414	M6 x 12mm Allen Head Bolt	10	X2-414
415	M8 x 25mm Allen Head Bolt	2	X2-415
416	M8 x 15mm Allen Head Bolt	13	X2-416
417	M8 Nylon Nut	11	X2-417
418	M8 x 20mm Bolt	4	X2-418

Meijer.com

COMPLETE PARTS LIST

Item No.	Description	Qty.	Part No.
419	Bushing 12 x 62mm	4	X2-419
420	M8 x 90mm Allen Head Bolt	4	X2-420
421	M12 C Clip	2	X2-421
422	12 x 20 x 0.5mm PU Washer	2	X2-422
423	2.5 x 7mm Screw	14	X2-423
424	M6 x 12mm Allen Head CAP Bolt	3	X2-424
425	6 x 10 x 1mm Spring Washer	11	X2-425
426	20 x 6 x T1.5mm Washer	3	X2-426
427	M42 C Clip	2	X2-427
428	M8 x 16mm Allen Head Bolt	8	X2-428
429	M10 x20mm Bolt	4	X2-429
430	10 x 16 x 2mm Spring Washer	10	X2-430
431	10 x 30 x T3.0 Washer	3	X2-431
432	M4 Nylon Nut	2	X2-432
433	M10 Nylon Nut	3	X2-433
435	16 x 25 x T3.0 Washer	4	X2-435
436	M10 x 40mm Allen Head Bolt Thread:10mm	1	X2-436
437	M6 x 12mm Screw	6	X2-437
438	17 x 22 x T1.5mm Plastic Washer	3	X2-438
439	M8 x 50mm Allen Head CAP Bolt	2	X2-439
441	Bearing Bushing 10.2 x 16 x 8mm	1	X2-441
442	M10 x 45mm Bolt Thread:15mm	1	X2-442
443	M10 x 95mm Allen Head CAP Bolt	1	X2-443
444	M12 x 20mm Allen Head Bolt	2	X2-444
445	Pedal Arm Pivot	2	X2-445
446	3/4” Nut	2	X2-446
447	M10 x 30mm Allen Head CAP Bolt	2	X2-447
448	M4 x 15mm Screw	2	X2-448
449	4 x 25mm Screw	2	X2-449
450	M3 x 16mm Screw	2	X2-450
451	M4 x 45mm Allen Head CAP Bolt	1	X2-451
452	M5 x 8mm Allen Head Bolt	2	X2-452
453	M4 x 8mm Screw	4	X2-453
454	Pin Nut	4	X2-454
455	M4 x 45mm Screw	2	X2-455
456	M3 x 8mm Screw	2	X2-456
457	Iron Plate Nut	6	X2-457
459	M8 x 45mm Bolt	3	X2-459
460	8 x 23 x T2.0mm Washer	3	X2-460
461	M6 x 10mm Screw	2	X2-461

Meijer.com

COMPLETE PARTS LIST

Item No.	Description	Qty.	Part No.
462	M4 x 10mm Screw	2	X2-462
463	4mm Washer	4	X2-463
464	3 x 12mm Screw – Cone Point	6	X2-464
465	5.4 x 8 – M5 x 7mm Screw	2	X2-465
466	M4 x 10mm Screw	4	X2-466
500			
501	4 x 12mm Screw – Cone Point	4	X2-501
502	15 x 22 – M8 x 10mm Bolt	2	X2-502
503	15 x 26 – M8 x 15mm Bolt	2	X2-503
504	M8 x 16mm Allen Head CAP Bolt	4	X2-504
505	20 x 78 – M14 x 35mm Bolt	2	X2-505
506	4 x 12mm Screw – Flat Point	4	X2-506
507	M10 x 56mm Allen Head Bolt	1	X2-507
508	M10 Nylon Nut	1	X2-508
509	4 x 19mm Screw	3	X2-509
510	4.5 x 15mm Screw	6	X2-510
511	M10 x 40mm Allen Head CAP Bolt	4	X2-511
513	8 x 27 x 2mm Washer	2	X2-513
514	8 x 14 x T2.0mm Spring Washer	2	X2-514
515	M8 x 20mm Allen Head Bolt	2	X2-515
516	M5 x 6mm Screw	2	X2-516
517	10 x 16 x T2.0mm Spring Washer	4	X2-517
518	M5 X 12mm Screw	2	X2-518
519	4 x 12mm Screw – Flat Point	2	X2-519
600			
601	8Pin Power Wire – Upper	1	X2-601
602	8Pin Power Wire – Middle	1	X2-602
603	8Pin Power Wire – Middle	1	X2-603
604	Elector-magnetic Wire	1	X2-604
605	Power Connect Wire	3	X2-605
606	3C Power Wire	1	X2-606
607	Hand Pulse Sensor Wire – Upper 350mm	2	X2-607
608	Hand Pulse Sensor Wire – Middle 160mm	2	X2-608
609	Hand Pulse Sensor Wire – Lower 900mm	2	X2-609
610	PC Board	1	X2-610
611	Button Board Connect Wire 100mm	1	X2-611
612	Receiver Wire 350mm	1	X2-612
613	Button Board	1	X2-613
614	Fan	1	X2-614
615	Receiver	1	X2-615

Meijer.com

COMPLETE PARTS LIST

Item No.	Description	Qty.	Part No.
616	Elevation Motor	1	X2-616
617	Speed Sensor	1	X2-617
618	Transformer	1	X2-618
619	Control Board	1	X2-619
620	Power Insert	1	X2-620
621	Power Switch	1	X2-621
622	Power Breaker	1	X2-622
623	Elector-magnetic System	1	X2-623
624	Magnetic Sensor	1	X2-624
625	5/16” Cable Tie	4	X2-625
626	3/8” Cable Tie	3	X2-626
627	Cable Plug	2	X2-627
628	Touch Control Board	1	X2-628
629	iPod dock connect 6pins wire	1	X2-629
630	Amplifier volume control 3pins wire	1	X2-630
631	Amplifier power connect 2pin wire	1	X2-631
632	iPod dock PC board	1	X2-632
633	Speaker	2	X2-633
634	Amplifier PC board	1	X2-634
700			
701	Action Handlebar Lower Cover	4	X2-701
702	Pedal Arm Front Pivot Cover	2	X2-702
703	Incline Frame Cover	1	X2-703
704	Undercarriage Cover – Left	1	X2-704
705	Undercarriage Cover – Right	1	X2-705
706	Nylon Bushing	2	X2-706
707	Action Handlebar Cap	2	X2-707
708	Incline Frame Holder – Front	2	X2-708
709	Console Support Tube Cover – Rear	1	X2-709
710	Console Support Tube Cover – Front	1	X2-710

Meijer.com

PARTS DIAGRAM

MOST OF THE PARTS SHOWN HERE HAVE BEEN PRE-ASSEMBLED.

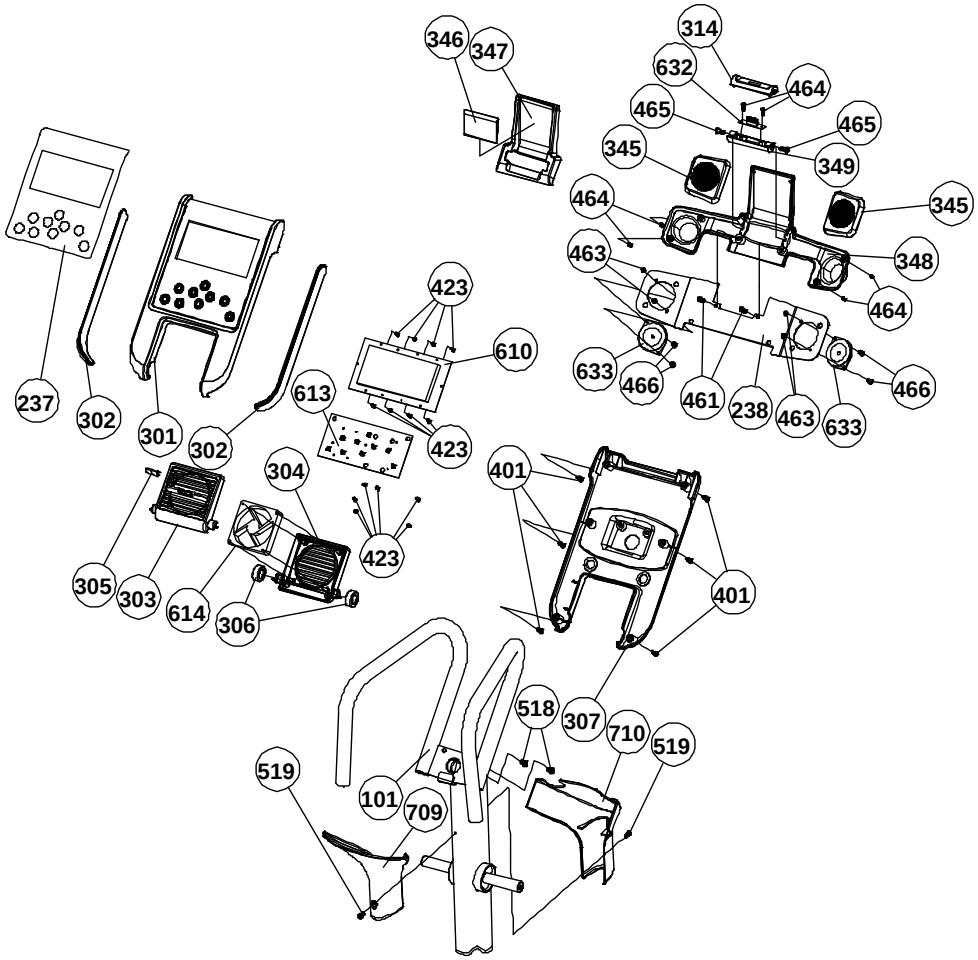

Meijer.com

PARTS DIAGRAM

MOST OF THE PARTS SHOWN HERE HAVE BEEN PRE-ASSEMBLED.

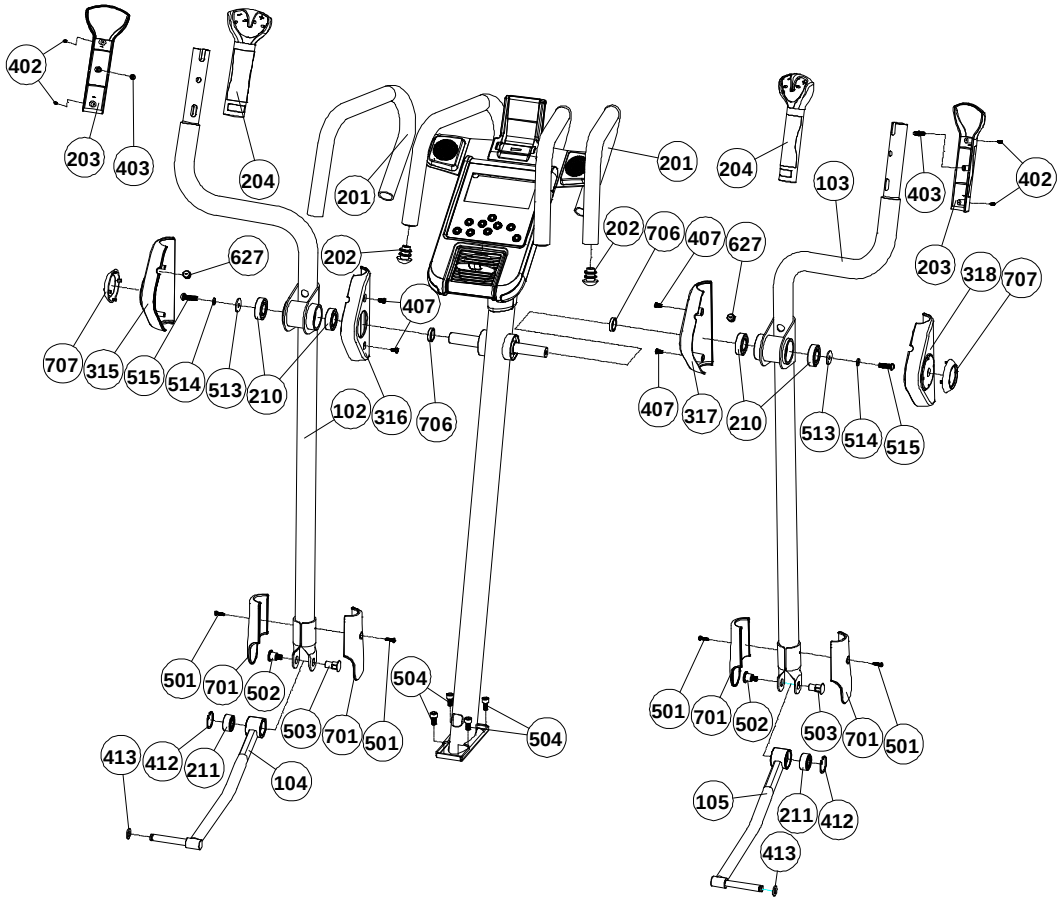

Meijer.com

PARTS DIAGRAM

MOST OF THE PARTS SHOWN HERE HAVE BEEN PRE-ASSEMBLED.

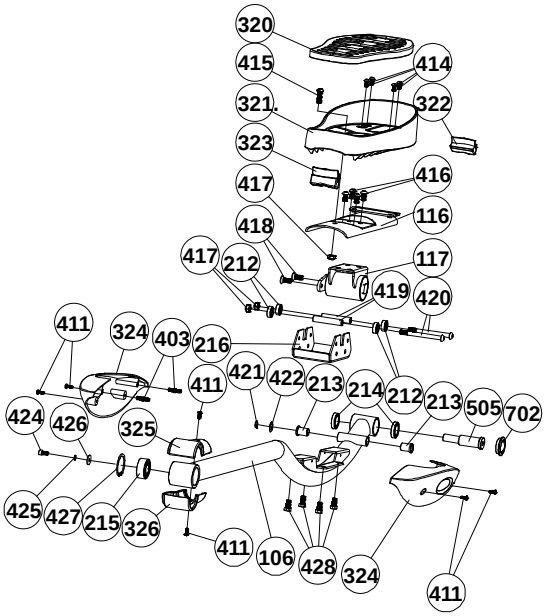

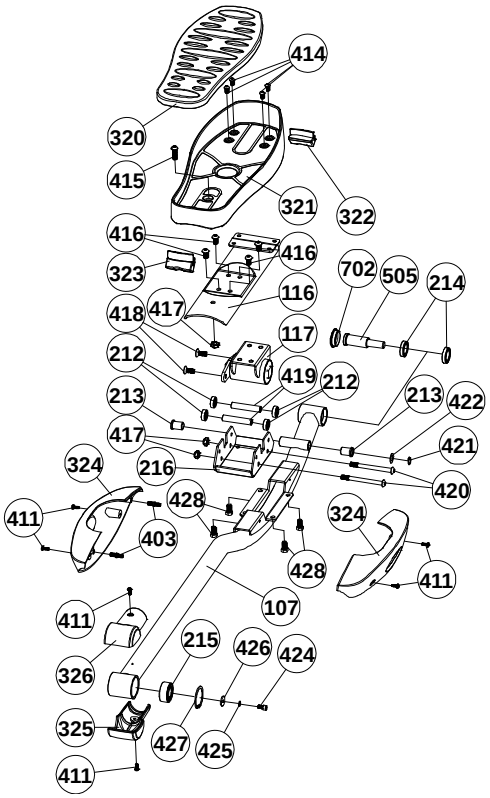

Meijer.com

PARTS DIAGRAM

MOST OF THE PARTS SHOWN HERE HAVE BEEN PRE-ASSEMBLED.

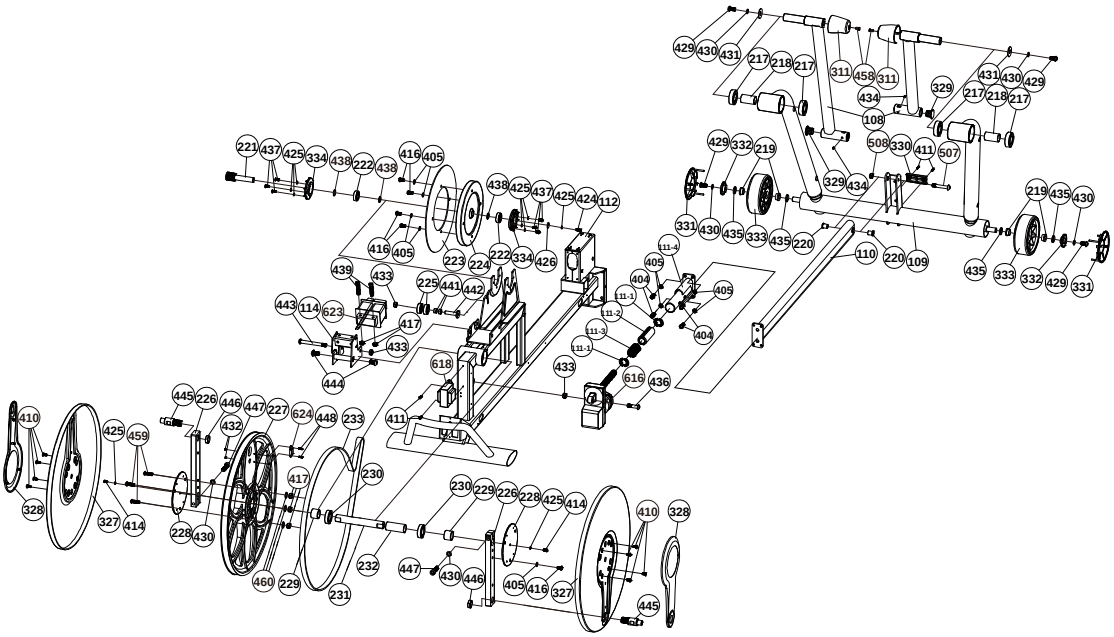

Meijer.com

PARTS DIAGRAM

MOST OF THE PARTS SHOWN HERE HAVE BEEN PRE-ASSEMBLED.

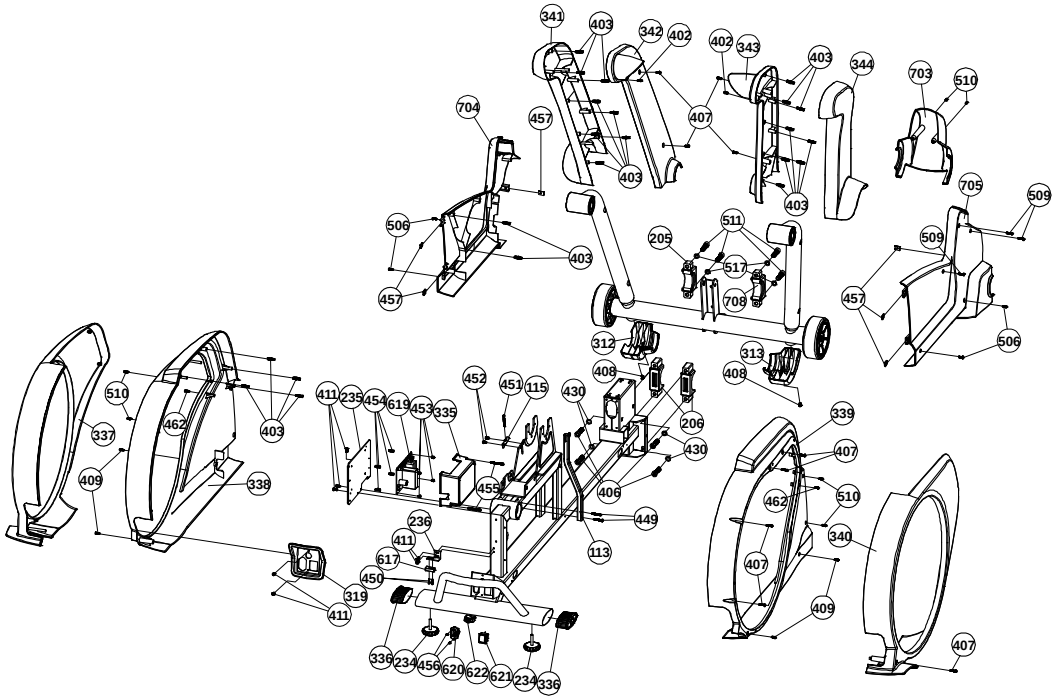

Meijer.com

PARTS DIAGRAM

MOST OF THE PARTS SHOWN HERE HAVE BEEN PRE-ASSEMBLED.

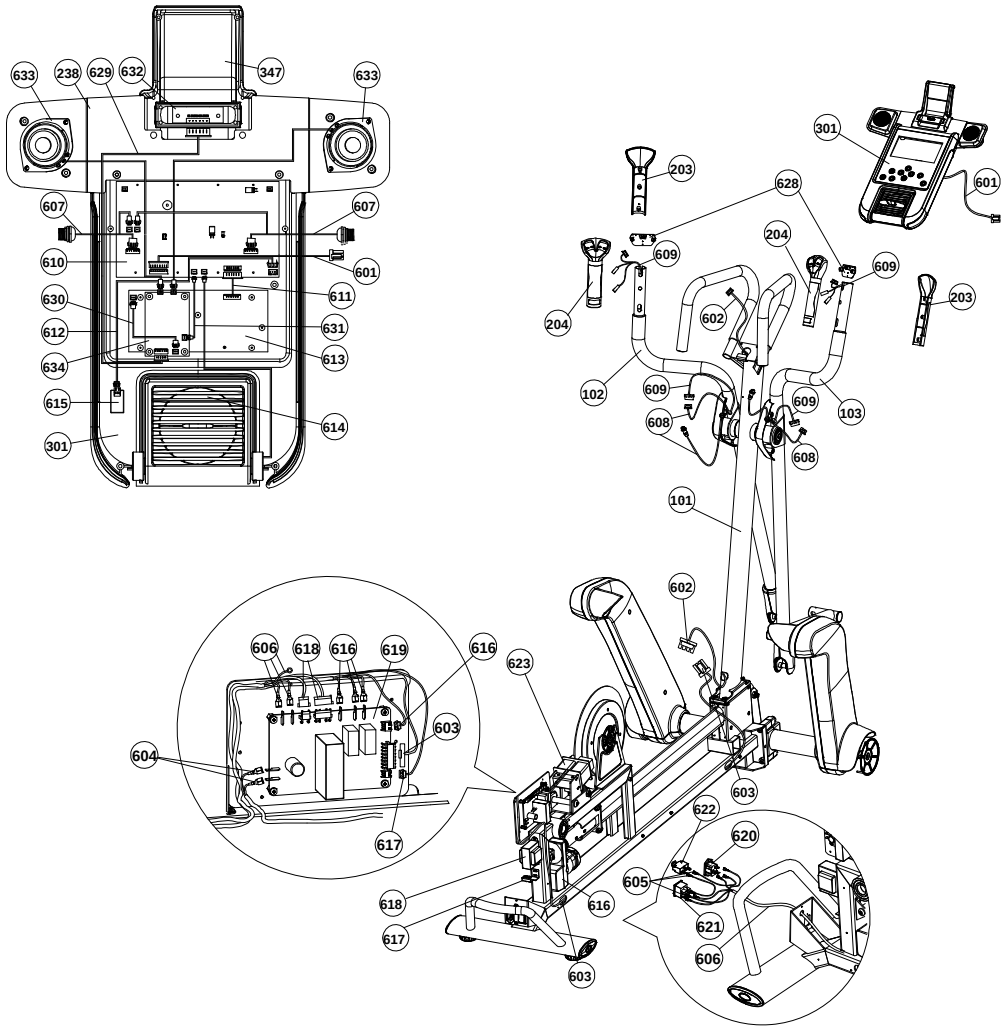

Meijer.com

ASSEMBLY

MOST OF THE PARTS SHOWN HERE HAVE BEEN PRE-ASSEMBLED.

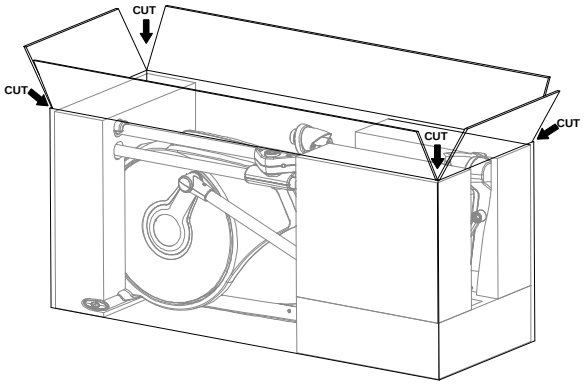

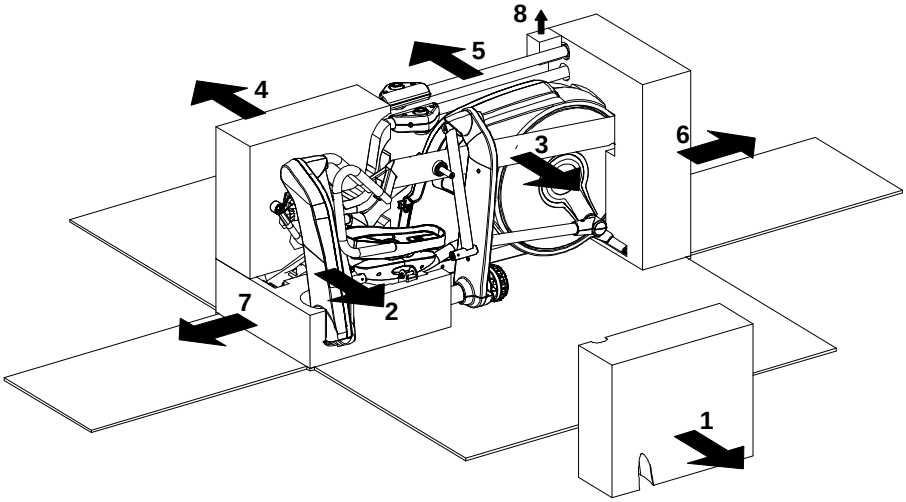

Meijer.com

ASSEMBLY

STEP 1: **Connect the Main Frame to Incline Frame**

(A) Place Styrofoam block under Main Frame tube to provide clearance to position Incline Frame (109) for assembly.
Remove the Blue film before you assemble the Incline Frame.

(B) Hold the Incline Frame Holder – Front (708) to the Incline Frame (109), secure using M10 x 40mm Allen Head CAP Bolts (511), 10 x 16 x T2.0mm Spring Washer (517) on the Incline Frame Holder by 8mm Allen Key (C).
Don't completely tighten M10 x40mm Allen Head CAP Bolt (511) until STEP 2

511	**X4**	
517	**X4**	
708	**X2**	

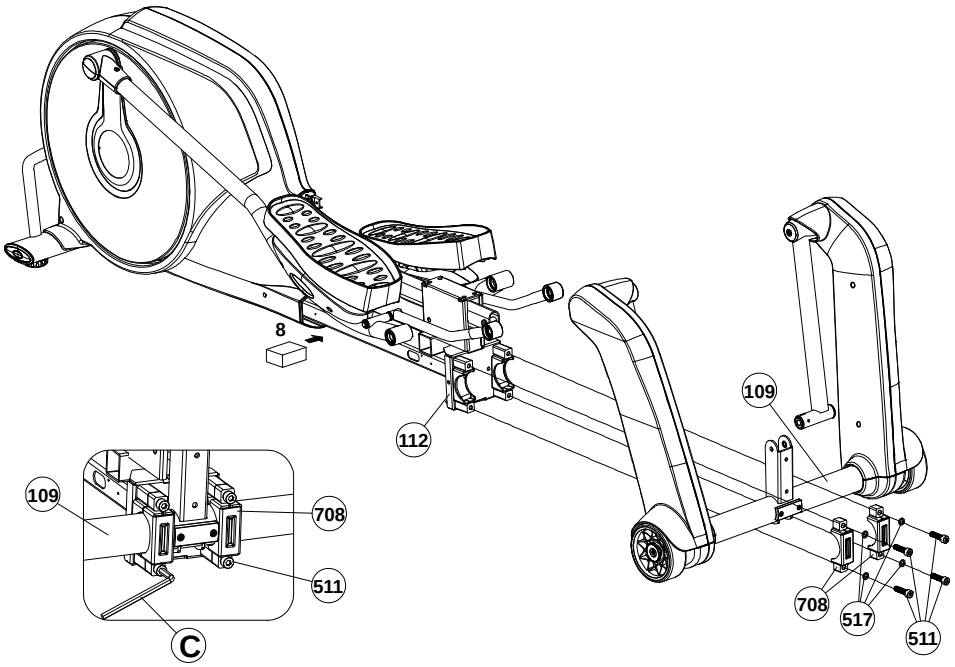

Meijer.com

ASSEMBLY

STEP 2: **Connect the Incline Transmission Tube**

(A) Rotate the Incline Frame (109) to align the bolt holes with the bolt holes in the Incline Transmission Tube-Front (110).

(B) Assemble the Incline Transmission Tube-Front (110) to the Incline Frame (109) with M10 x 56mm Allen Head Bolt (507), M10 Nylon Nut (508), and by 8mm Allen Key (C) and Wrench (D).

(C) Tight the M10 x40mm Allen Head CAP Bolt (511) by 8mm Allen Key (C).

507 X1

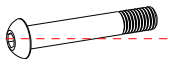

508 X1

Deleted: mating

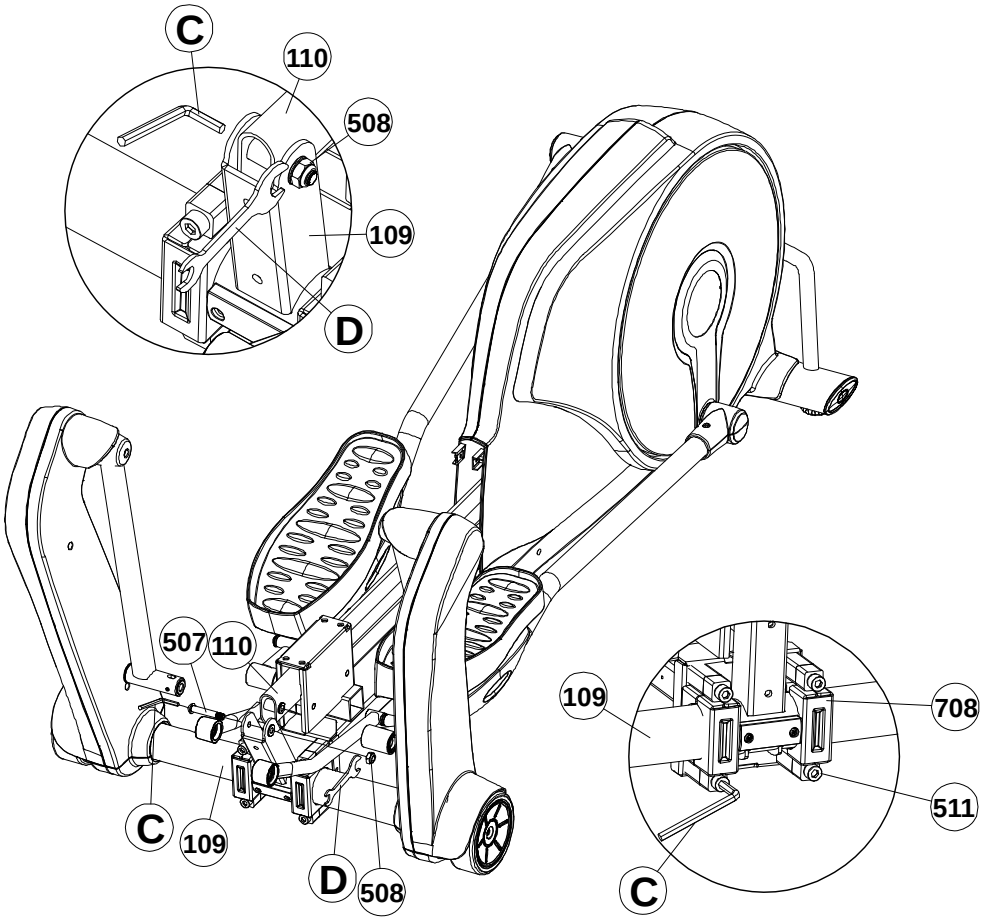

Meijer.com

ASSEMBLY

STEP 3: **Assemble the Console Support Tube**

(A) Assemble the Computer Assembly to the Console Support Tube (101) and secure using two M5 x 12mm Screw (518) by Screwdriver (E)

(B) Assemble the Console Support Tube Cover – Rear (709) and Console Support Tube Cover – Front (710) to the Console Support Tube (101), secure using the 4 x 12 Screw – Flat Point (519).

518	X2	
519	X2	
709	X1	
710	X1	

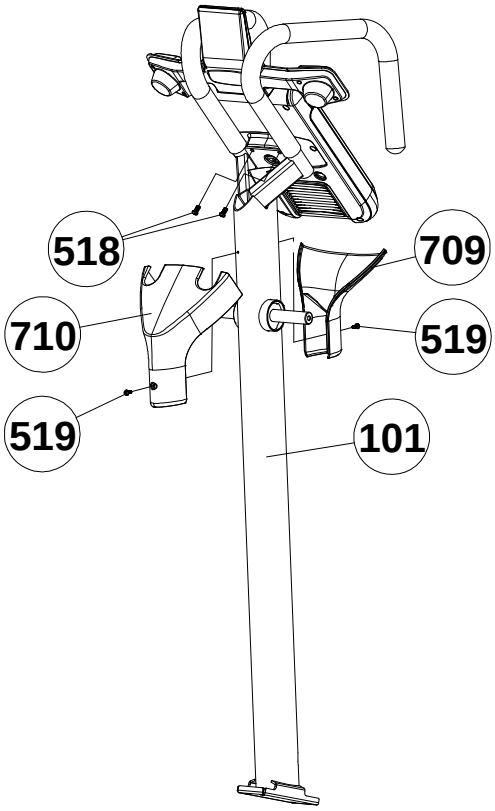

Meijer.com

ASSEMBLY

STEP 4: **Assemble the Console Support Tube**

(A) Assemble the Console Support Tube (101) to the Main Frame and secure using four M8 x 16mm Allen Head CAP Bolts (504) by 6mm Allen Key (B)

(B) Connect the 8Pin Power Wire – Middle (602) to 8Pin Power Wire – Lower (603).

504 X4

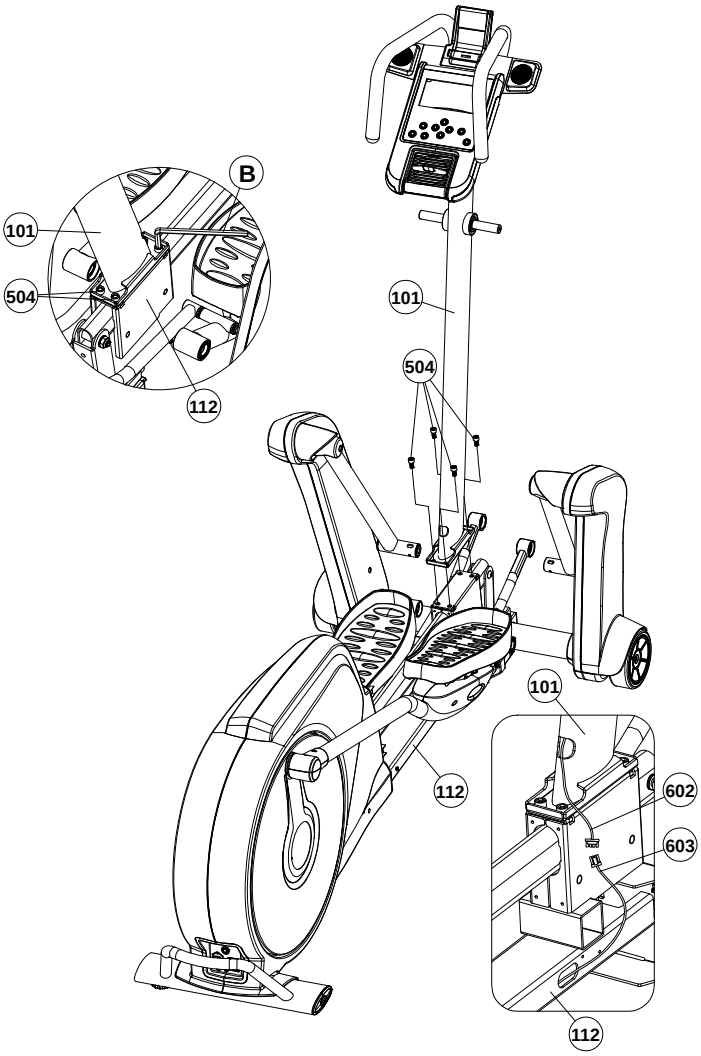

Meijer.com

ASSEMBLY

STEP 5: **Assemble the Handlebar**

(A) Place the Nylon Bushing (706) into the Console Support Tube (101).

(B) Assemble the Handlebar – Right (103) to the Console Support Tube (101) by M8 x 20mm Allen Head Bolt (515), 8 x 14 x T2.0mm Spring Washer (514) and 8 x 27 x 2mm Washer (513) and then press the Action Handlebar Cap (707) into the Handlebar.

(C) Connect the Hand Pulse Sensor Wire – Middle (608) to the Console Housing – Bottom (307)

(D) Repeat the above procedure to assemble the left side.

706	X2	
513	X2	
514	X2	
515	X2	
707	X2	

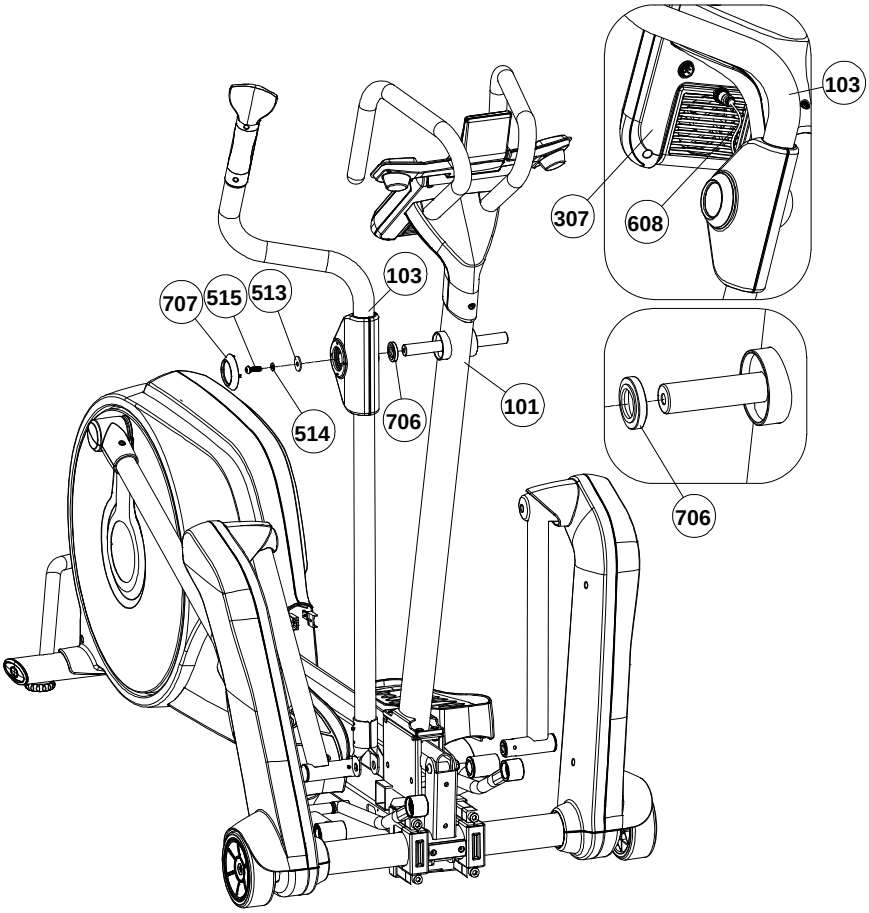

Meijer.com

ASSEMBLY

STEP 6: **Assemble the Undercarriage Cover**

(A) Lift the Pedal Arm and assemble the Undercarriage Cover – Left (704) to the Main Frame (112), and secure using two 4 x 12mm Screw – Flat Point (506) and two 4.5 x 15mm Screws (510).

(B) Repeat above the procedure to assemble the right side.

(C) Secure using the 4 x 19mm Screw (509) to integrate the right and left cover.

506	**X4**	
510	**X4**	
509	**X3**	

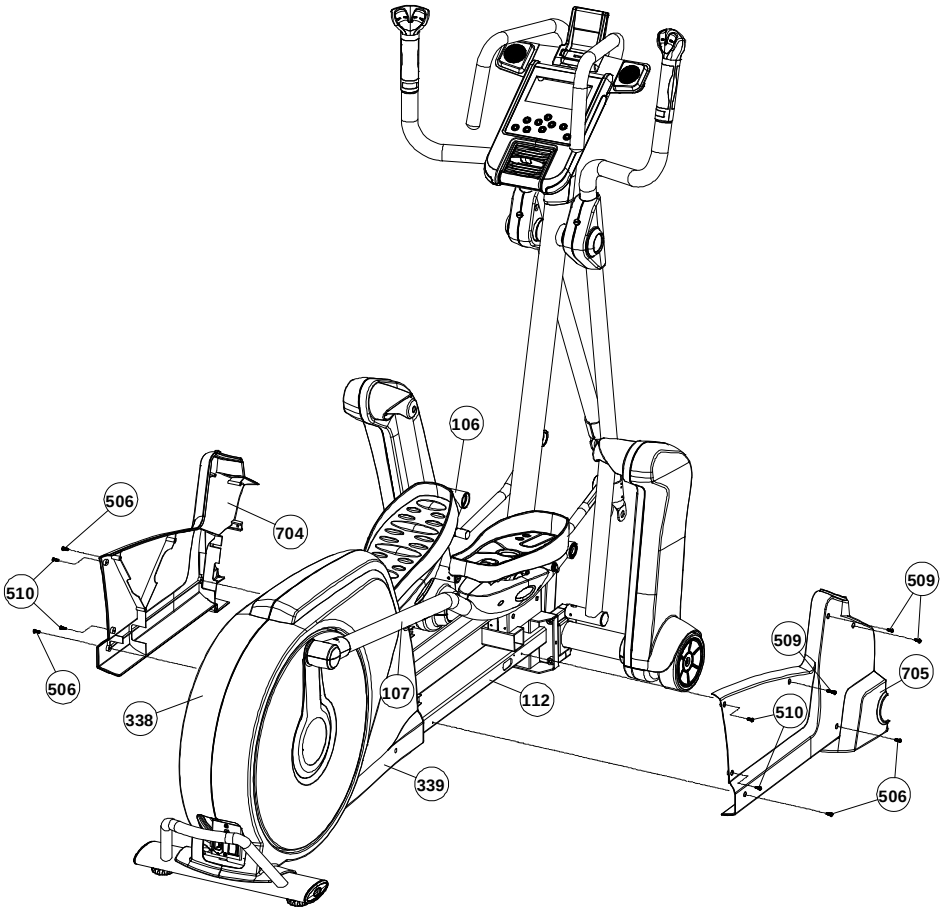

Meijer.com

ASSEMBLY

STEP 7: **Assemble the Incline Frame Cover**

(A) Assemble the Incline Frame Cover (703) to the Incline Frame and secure using two 4.5 x 15mm Screws (510).

510 **X2**

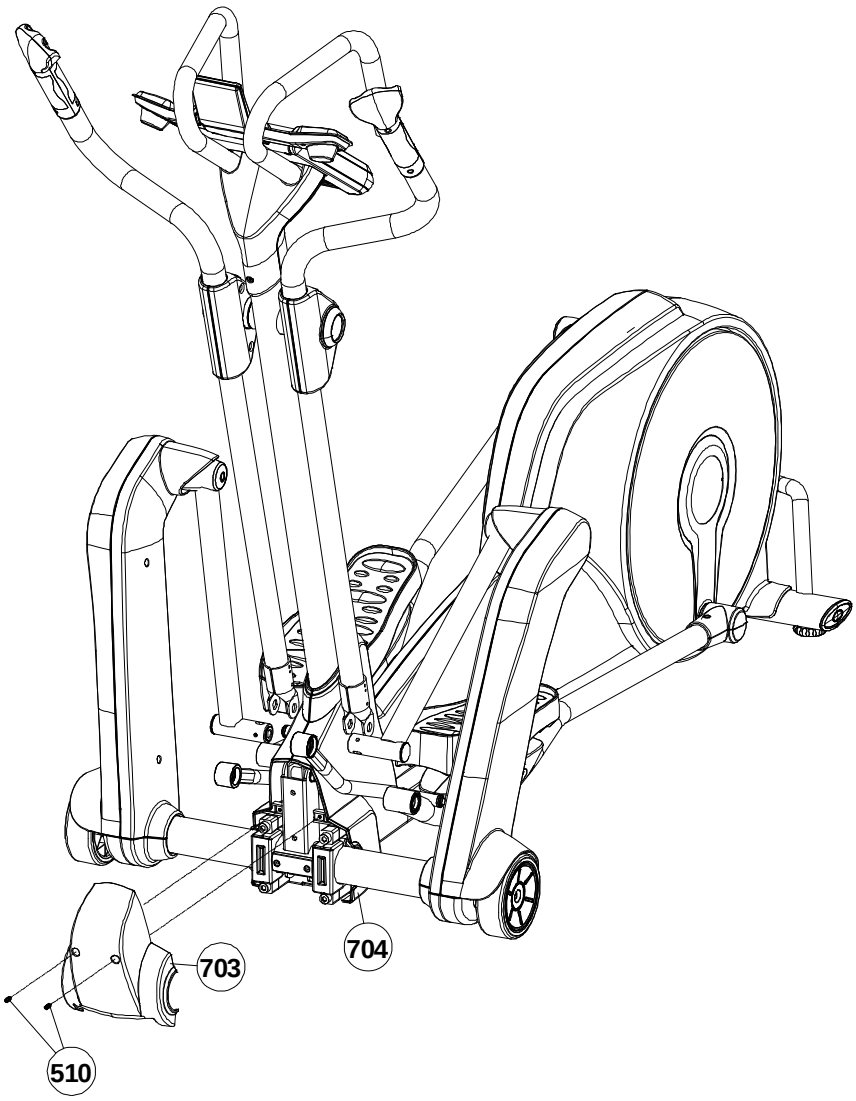

Meijer.com

ASSEMBLY

STEP 8: **Connect the Pedal Arm to the Pedal Swing Arm**

(A) Slide the 20 x 78 – M14 x 35mm Bolt (505) through the Pedal Arm – Right (107) and Pedal Swing Arm (108) then secure by 8mm Allen Key (C)

(B) Press the Pedal Arm Front Pivot Cover (702) into the ends of the Pedal Arm – Right (107)

(C) Repeat the above procedure to assemble the left side.

505 X2

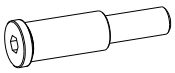

702 X2

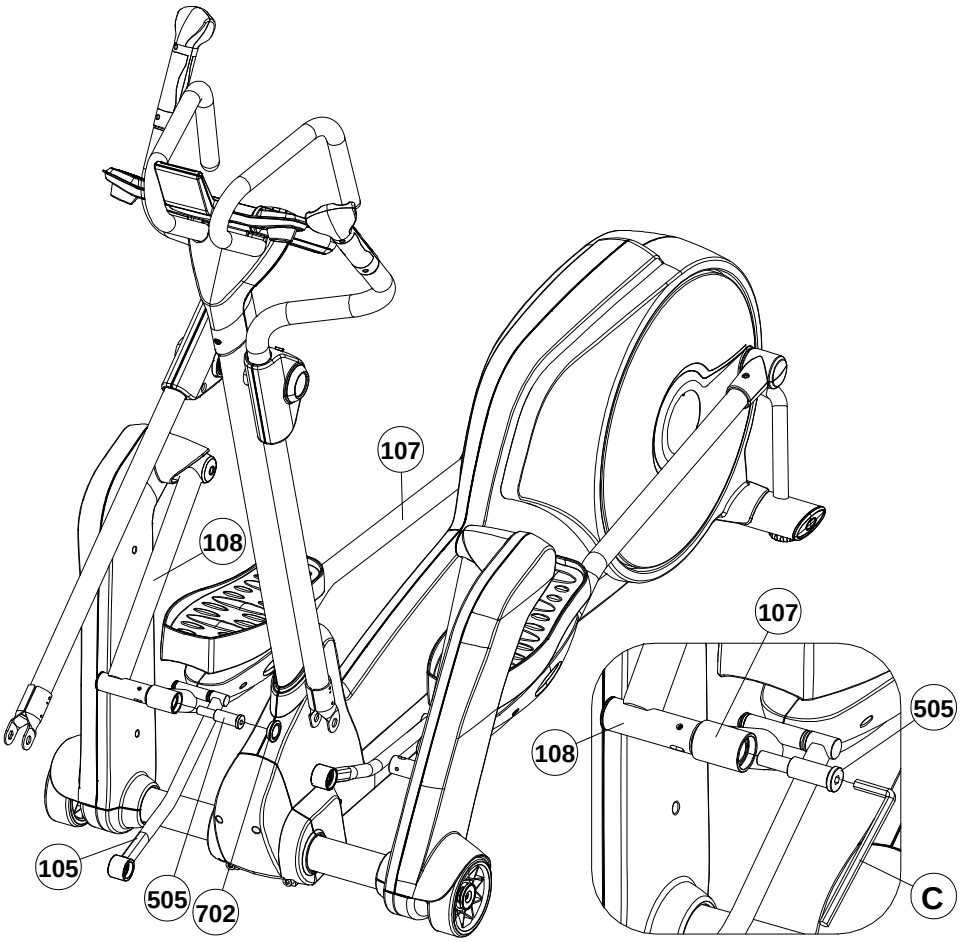

Meijer.com

ASSEMBLY

STEP 9: Connect the Moving Linkage

(A) Connect the Action Handlebar – Right (103) to the Moving Linkage – Right (105) and secure using the 15 x 22 – M8 x 10mm Bolt (502)and 15 x 26 – M8 x 15mm Bolt (503) by 8mm Allen Key (C).

(B) Repeat the above procedure to assemble the left side.

502 X2

503 X2

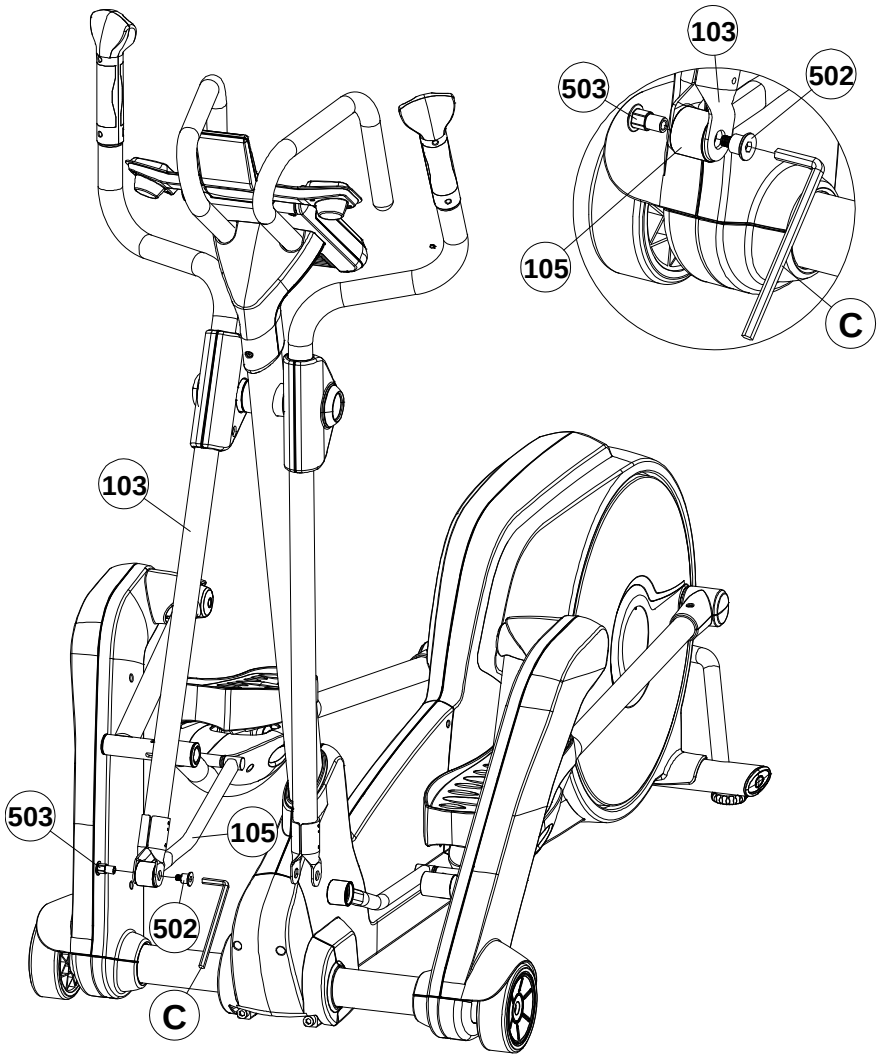

Meijer.com

ASSEMBLY

STEP 10: Assemble the Action Handlebar Lower Cover

(A) Assemble the Action Handlebar Lower Cover (701) to the Action Handlebar – Right (103) and secure using the 4 x 12mm Screw – Cone Point (501)

(B) Repeat the above procedure to assemble the left side.

701	**X2**	
501	**X4**	

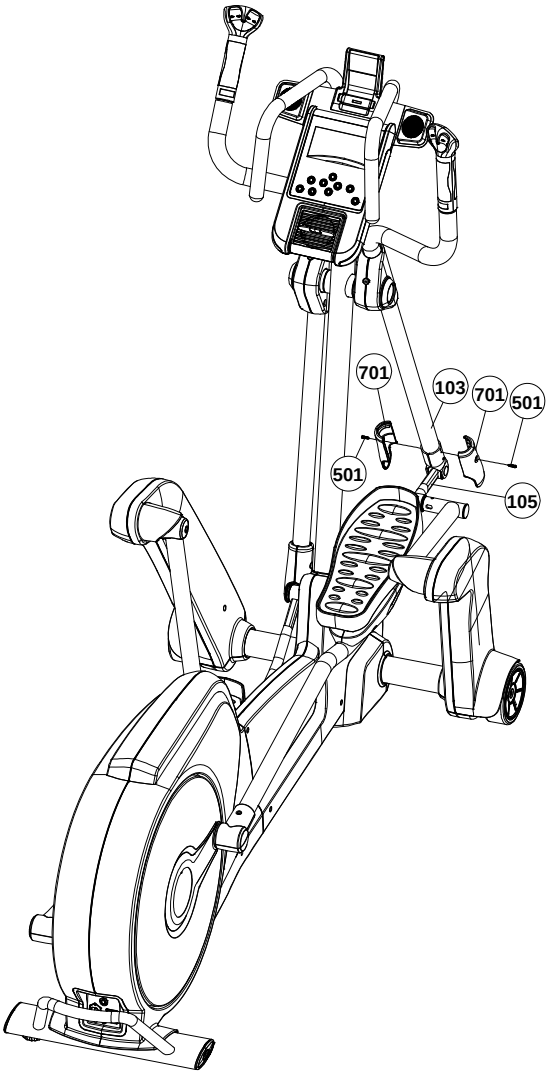

Meijer.com

ASSEMBLY

STEP 11: Tighten Set Screws

(A) Secure the M5 x 6mmBolt (516) to the Pedal Swing Arm (108) using the 2.5mm Allen Key (A)

516 **X2**

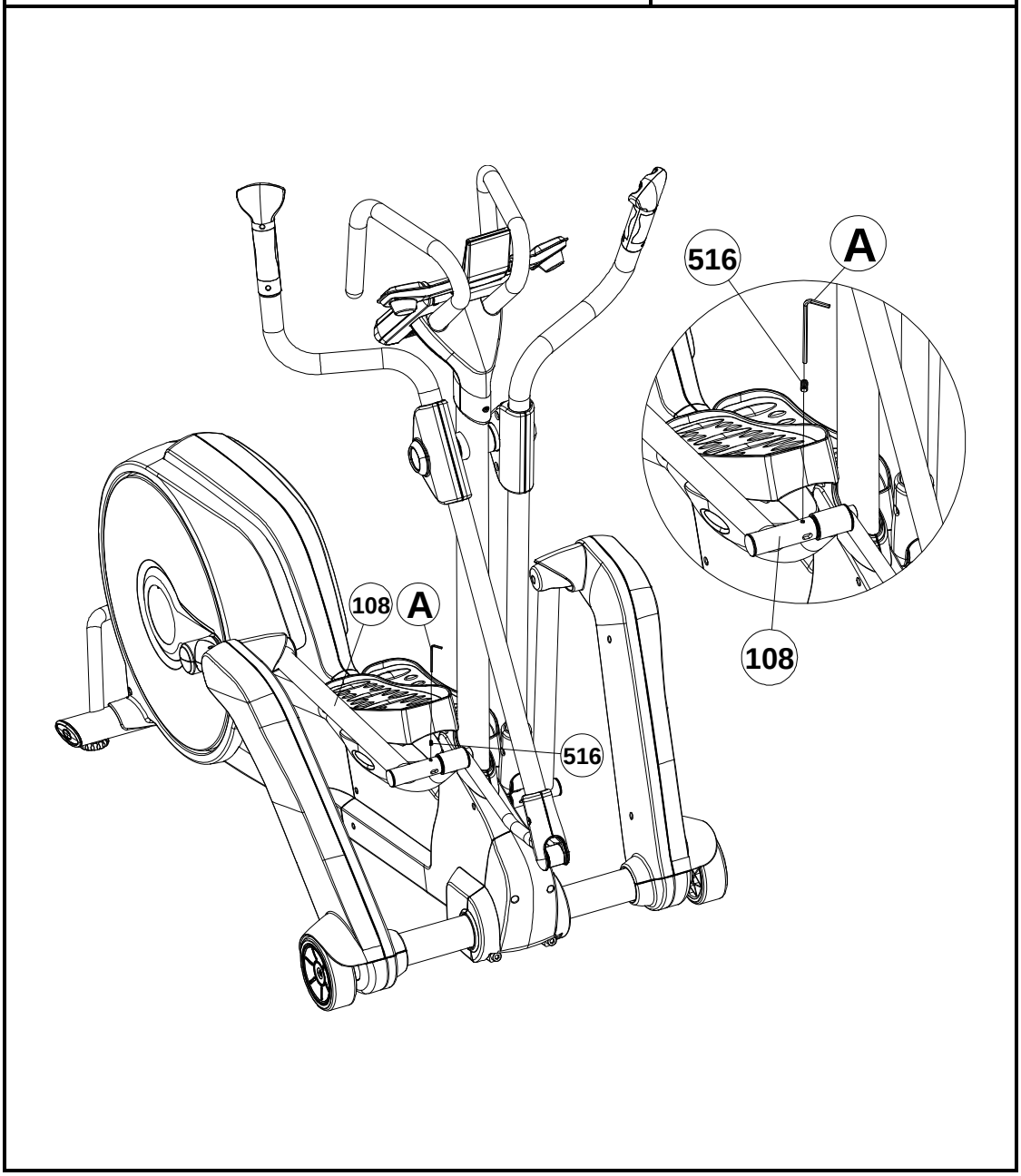

Meijer.com

LEVEL ADJUSTMENT

LEVEL ADJUSTMENT:

To adjust the levelers follow these instructions:

You will need someone to help you with this procedure, as you will need to tip, the AGILE Dynamic Motion Trainer while adjusting the levelers

Tip the AGILE Dynamic Motion Trainer to the left/right. You will then see the LEVEL ADJUSTERS. These will need to be screwed either in or out to level the trainer. Repeat for the other side. It may help to use a bubble level when adjusting the level on your AGILE Dynamic Motion Trainer.

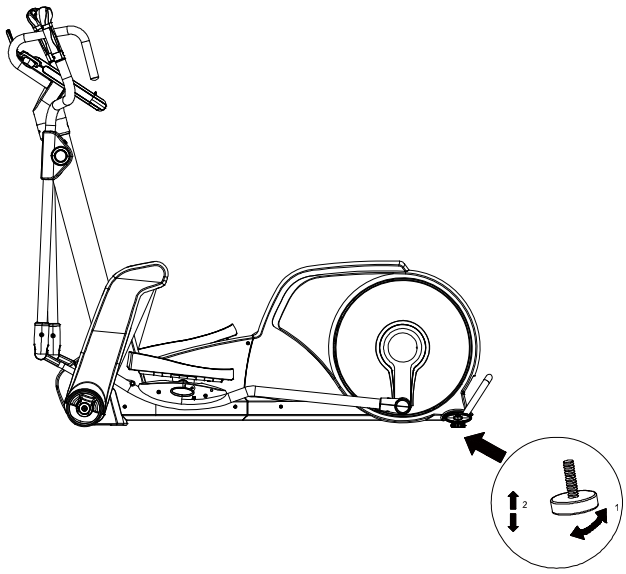

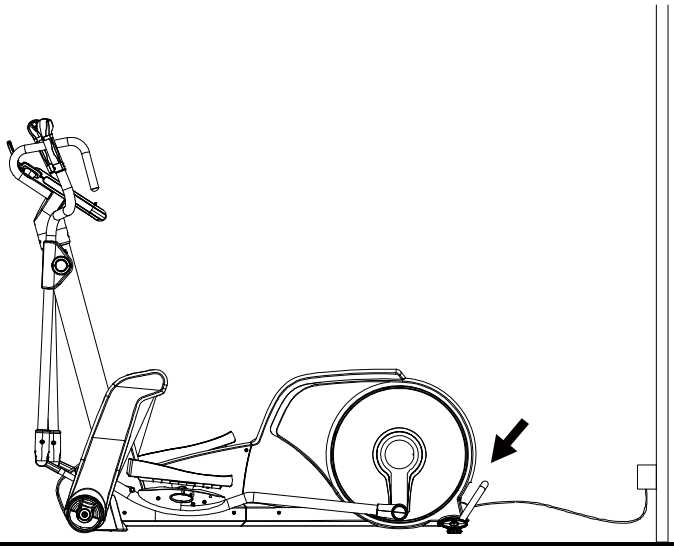

Meijer.com

LITE-TOUCH CONTROL OPERATION

LITE-TOUCH CONTROL:

The Intensity Level and Motion Level can be controlled using the Lite-Touch controls on the hand grips of the action handlebars. As the illustration indicates, the right Lite-Touch Controller controls the Motion Level and the left Lite-Touch Controller controls the Intensity Level. You can see the corresponding readouts on the console follow this same orientation.

To use the Lite-Touch Controls, simply start a program or select START and begin your work out. To increase either the Motion Level or the Intensity Level, move your thumb to the thumb groove with the "+" indicator. If you hold your thumb in the thumb groove the level will continue to increase until you remove your thumb. To decrease the level simply place your thumb in the groove marked with the "-" indicator.

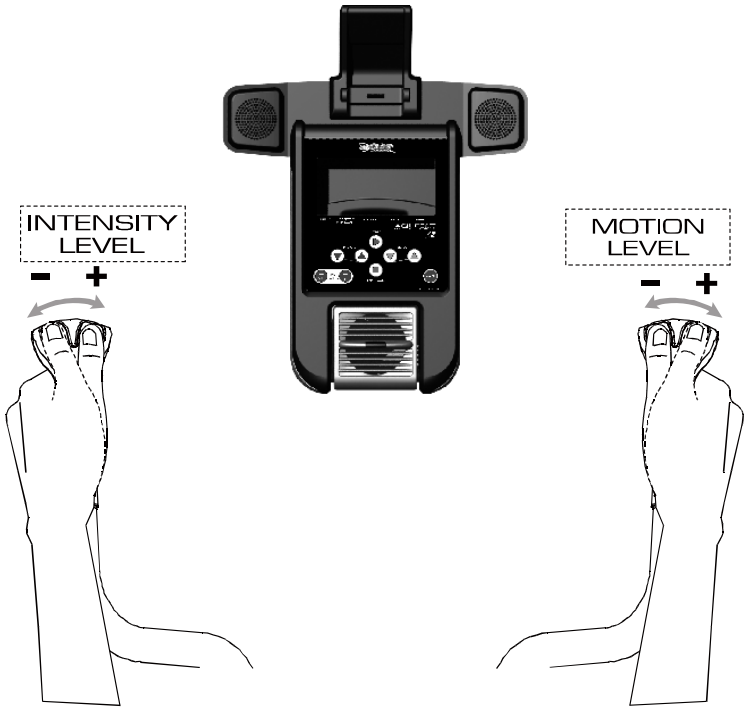

Meijer.com

iPod MOUNTING INSTRUCTION

1. Attach your iPod into the dock
2. Rotate the iPod to lay on the bracket
3. Adjust the intensity of volume on computer buttons while playing music.

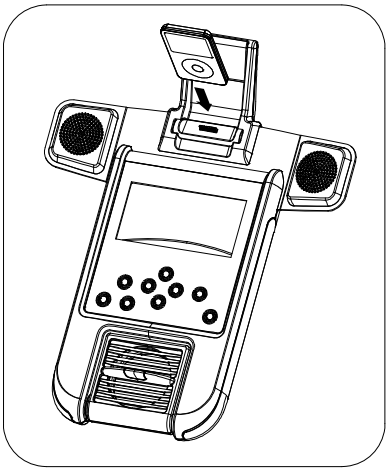

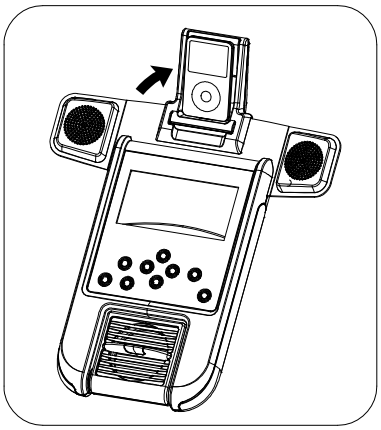

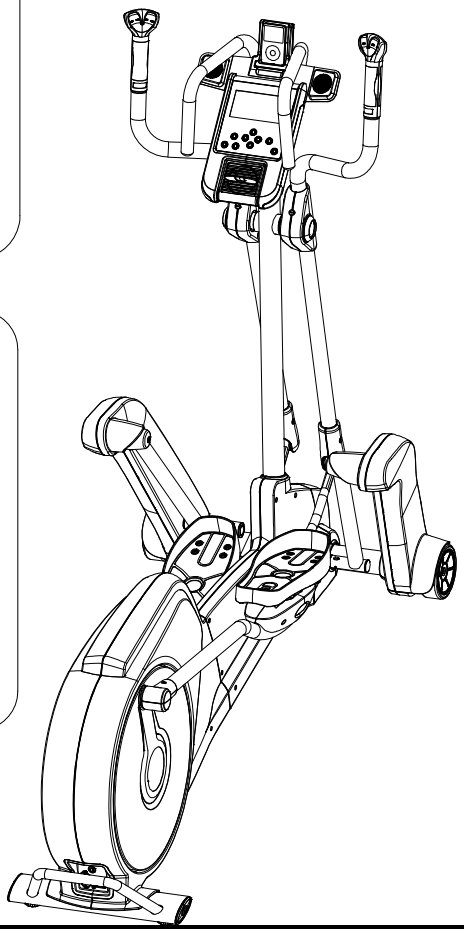

Meijer.com

TRANSPORT INSTRUCTION

TRANSPORT INSTRUCTIONS:

To transport your AGILE Dynamic Motion Trainer simply lift the back end and roll it away to the desired location, as shown.

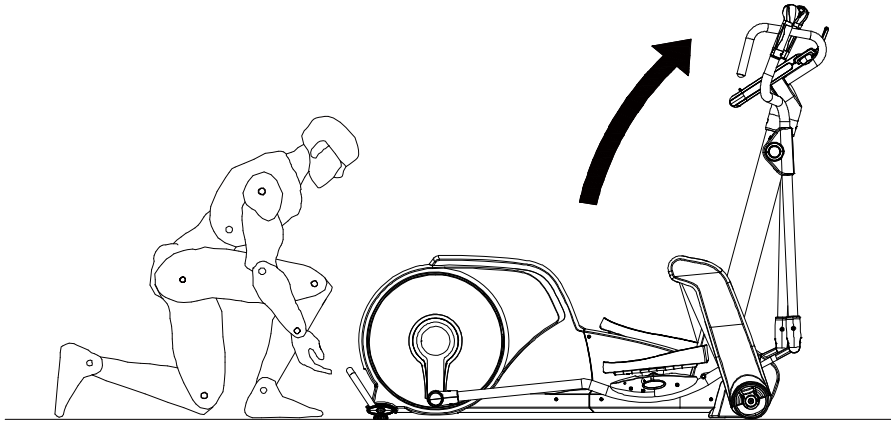

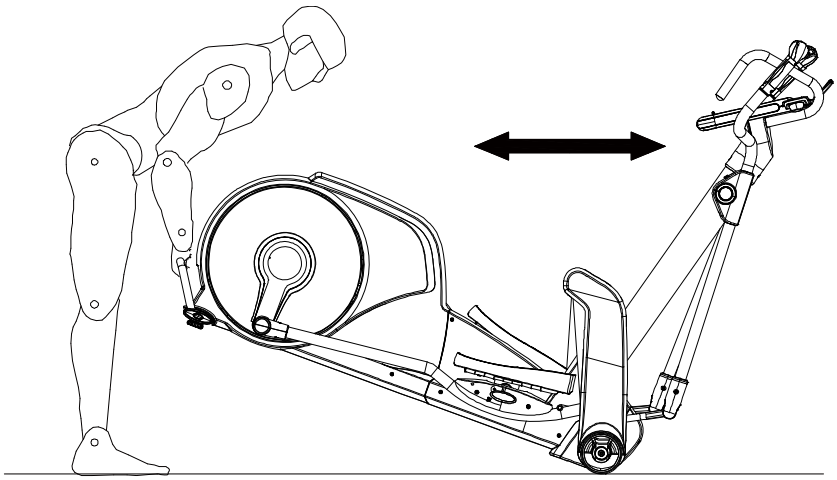

Meijer.com

MUSCLE CHART

Targeted muscle groups:

The exercise routine that is performed on this product will develop primarily lower body muscle groups. These muscle groups are shown in gray color on the chart below.

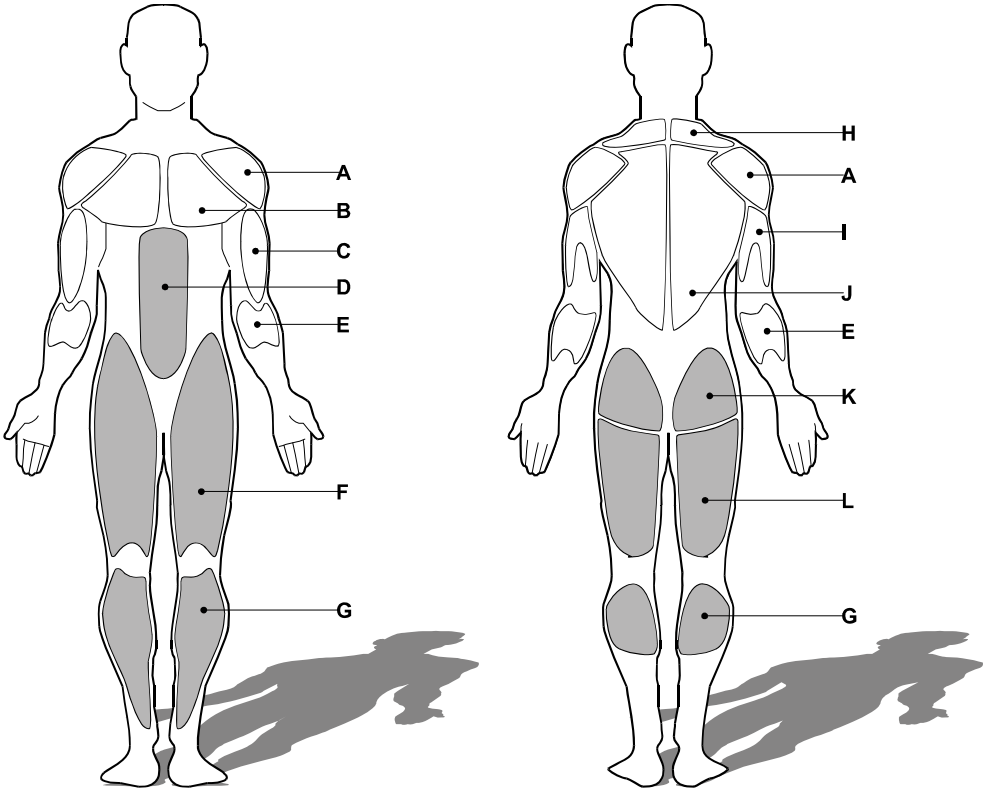

MUSCLE GROUPS

A	Shoulder muscles	Calf muscles	G
B	Pectoral muscles	Trapezius muscles	H
C	Bicep muscle	Tricep muscles	I
D	Abdominal muscles	Back muscles	J
E	Forearm muscles	Gluteal muscles	K
F	Quadricep muscles	Hamstring muscles	L

Meijer.com

STRETCHING ROUTINE

Warm up and cool down:
A successful exercise program consists of a warm-up, aerobic exercise, and a cool-down. Do the entire program at least two and preferably three times a week, resting for a day between workouts. After several months, you can increase your workouts to four or five times per week.
Warming up is an important part of your workout, and should begin every session. It prepares your body for more strenuous exercise by heating up and stretching out your muscles, increasing your circulation and pulse rate, and delivering more oxygen to your muscles. At the end of your workout, repeat these exercises to reduce sore muscle problems. We suggest the warm-up and cool-down exercises on the following pages:

Toe Touch:
Slowly bend forward from your waist, letting your back and shoulders relax as you stretch toward your toes. Reach down as far as you can and hold for 15 counts.

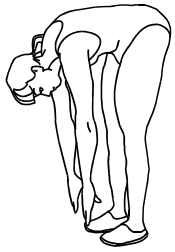

Shoulder Lift:
Lift your right shoulder up toward your ear for one count. Then lift your left shoulder up for one count as you lower your right shoulder.

Inner Thigh Stretch:
Sit with the soles of your feet together with your knees pointing outward. Pull your feet as close into your groin as possible. Gently push your knees towards the floor. Hold for 15 counts.

Hamstring Stretch:
Sit with your right leg extended. Rest the sole of your left foot against your right inner thigh. Stretch toward your toe as far as possible. Hold for 15 counts. Relax and then repeat with left leg extended.

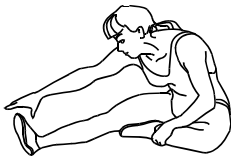

Side Stretch:
Open your arms to the side and continue lifting them until they are over your head. Reach your right arm as far upward toward the ceiling as you can for one count. Feel the stretch up your right side. Repeat this action with your left arm.

Calf-Achilles Stretch:
Lean against a wall with your left leg in front of the right and your arms forward. Keep your right leg straight and the left foot on the floor; then bend the left leg and lean forward by moving your hips toward the wall. Hold, and then repeat on the other side for 15 counts.

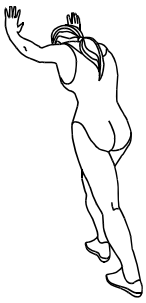

Head Roll:
Rotate your head to the right for one count, feeling the stretch up the left side of your neck. Next, rotate your head back for one count, stretching your chin to the ceiling and letting your mouth open. Rotate your head to the left for one count, and finally, drop your head to your chest for one count.

Meijer.com

COMPUTER OPERATION

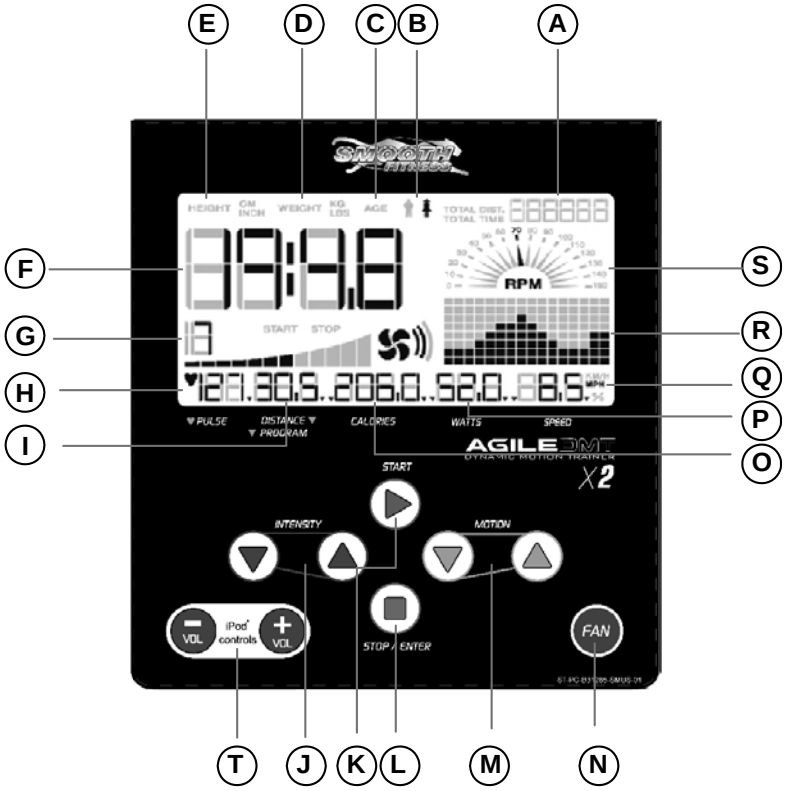

A	INTENSITY LEVEL/RPM	B	GENDER	C	AGE
D	WEIGHT	E	HEIGHT	F	TIME
G	RESISTANCE LEVEL	H	PULSE	I	DISTANCE / PROGRAM
J	INTENSITY UP/DOWN	K	START	L	STOP/ENTER
M	MOTION UP/DOWN	N	COOL FAN	O	CALORIES
P	WATT	O	SPEED	R	INTENSITY LEVEL DOT MATRIX
S	RPM DIAGRAM	T	iPod VOL CONTROLS		

Meijer.com

COMPUTER OPERATION

DISPLAY FUNCTIONS:

INTENSITY LEVEL DISPLAY:

Displays intensity level from 1 to 16.

MOTION LEVEL DISPLAY:

Displays motion level from 1 to 12.

8 X 16 DOT MATRIX INTENSITY LEVEL PROFILE DISPLAY:

Displays all operating instructions prior to the workout and displays intensity level profile during the workout.

USER DATA:

Displays and store user data from U1 to U9.

FAN:

First Press Second Press: Third Press: Fourth Press: **STOP**

COMPUTER OPERATION:

ENGLISH/METRIC CONVERSION:
The elliptical computer display can show ENGLISH and METRIC information. Computer display *"MPH"* is ENGLISH status and display *"KM/H"* is METRIC status. The factory should have the proper setting on this for different markets. In case that the elliptical needs to be converted between METRIC and ENGLISH readout, please follow the procedure as below:

1. Set the POWER SWITCH to ON. Then press INTENSITY UP/DOWN and STOP/ENTER three buttons on the computer and hold them for 3 seconds. The computer will sound one short beep and *"Sr 1"* blinking. Press INTENSITY UP/DOWN button to select display *"Sr 2"* blinking then press START button to enter conversion METRIC/ENGLISH function.
2. After Press the START button the computer will display either "*KM/H*" or "*MPH*" blinking then press INTENSITY UP/DOWM button to switch between *"KM/H"* and *"MPH"* then press STOP/ENTER button twice return to the POWER ON status.

PAUSE/STOP:
During the workout, press STOP button or STOP pedaling for 30 seconds to enter PAUSE status. The INTENSITY LEVEL Dot Matrix display will show *"PAUSE"*. All figures on the console will be frozen. Press the START button or start pedaling to resume the program and all the display will continue the performance until the program finishes. If you leave the pedal stopped for over 3 minutes or press the STOP button, all the data will return to 0 and the computer will return to POWER ON status.

SLEEP MODE:
The computer will automatically enter SLEEP MODE if left idle for 3 minutes without any input in POWER ON status. When the computer is in SLEEP MODE, press any button or pedal and the machine will return to POWER ON status. You can turn SLEEP MODE off but the console will be drawing power indefinitely if it plugged in to keep the LCD lit. To turn SLEEP MODE off, get the console to POWER ON status then press INTENSITY UP/DOWN and STOP/ENTER three buttons on the computer and hold them for 3 seconds. The computer will sound one short beep and *"Sr 1"* blinking. Press START button to enter conversion SLEEP MODE function. After Press the START button the computer will display either *"On"* or *"Off"* blinking then press INTENSITY UP/DOWN button to switch between *"On"* and *"Off"* then press STOP/ENTER button twice to return to the POWER ON status.

QUICK START:
Press the START button to start exercise,
1. Intensity starts from Level 1, press to INTENSITY UP/DOWN or using the Lite-Touch control on the hand grips of the left action handlebar.
2. Level starts from Level 1, press MOTION UP/DOWN or using the Lite-Touch control on the hand grips of the right action handlebar.

Meijer.com

COMPUTER OPERATION

PROGRAM OPERATION INSTRUCTION:
At POWER ON status, press STOP/ENTER button to enter preset PROGRAM MODE and to set user parameters.

SET UP USER CODE:
At first, the LCD will show a blinking U1, and will also display only factory default setting values for user HEIGHT, WEIGHT, AGE and GENDER. Press the INTENSITY UP/DOWN buttons to choose the User ID from U1 to U9 and press the STOP/ENTER buttons to assign the user ID shown.

HEIGHT set up – After the User ID set up procedure, the computer will display the default "170(cm)/67" or previous setting and begin blinking. Press the INTENSITY UP/DOWN button to adjust the user height information then press STOP/ENTER to confirm.

WEIGHT set up – After the User HEIGHT confirmation procedure, the computer will display the default "68(kgs)/150(lbs) or previous setting and begin blinking. Press the INTENSITY UP/DOWN button to adjust the user weight information then press STOP/ENTER to confirm.

AGE set up – After the WEIGHT set up procedure, the computer will display the default "35" or previous setting and begin blinking. Press the INTENSITY UP/DOWN button to adjust the user age information then press STOP/ENTER to confirm.

GENDER set up – After the AGE set up procedure, the computer will display the default "man" or previous setting and begin blinking. Press the INTENSITY UP/DOWN button to adjust the user gender then press STOP/ENTER to confirm.

PROGRAM MODE
After setting the user GENER, the computer will display a blinking P1, indicating that the user is now select from P1~10. Press the INTENSITY UP/DOWN buttons to select the programs and press the ENTER button to set up the program.

PROGRAM 1 – TARGET TIME
After enter this program, the TIME display shows the factory default setting "32:00". Press INTENSITY UP/DOWN button to adjust the target time and press STOP/ENTER to confirm.
Press START button to start the target time program. Time counts down to 0, Distance and Calories count up. Press INTENSITY UP/DOWN to adjust the resistance and press MOTION UP/DOWN to adjust the motion.

PROGRAM 2 – TARGET DISTANCE
After enter this program, the DISTANCE display shows factory default setting 3.2mph or 5.0km/h. Press INTENSITY UP/DOWN button to adjust the target distance and press STOP/ENTER to confirm.
Press START button to start the target distance program. Distance counts down to 0, Time and Calories count up. Press INTENSITY UP/DOWN to adjust the resistance and press MOTION UP/DOWN to adjust the motion.

PROGRAM 3 – TARGET CALORIES
After enter this program, the CALORIES display shows factory default setting "50". Press INTENSITY UP/DOWN button to adjust the target calories and press STOPE/ENTER to confirm.
Press START button to start the target calories program. Calories counts down to 0, Time and Distance count up. Press INTENSITY UP/DOWN to adjust the resistance and press MOTION UP/DOWN to adjust the motion.

PROGRAM 4 – FAT BURNING
After enter this program, the TIME display shows factory default setting "16:00". Press INTENSITY UP/DOWN button to adjust the target time and press STOP/ENTER to confirm.
Press START button to start the FAT BURNING program. Time counts down to 0, Distance and Calories count up. Dot Matrix display shows the pre-set INTENSITY and MOTION profile. Press INTENSITY UP/DOWN to adjust the resistance and press MOTION UP/DOWN to adjust the motion.

Fat Burn Program provides 1 to 16 one minute segments.

TIME/zone	**1st Segment**	**2nd Segment**	**3rd Segment**	**4th Segment**	**5th Segment**	……	**13th Segment**	**14th Segment**	**15th Segment**	**16th Segment**
INTENSITY/Level	L1	L3	L7	L9	L9	……	L9	L7	L3	L1
MOTION/Level	1	1	1	1	1	……	1	1	1	1

Meijer.com

COMPUTER OPERATION

PROGRAM 5 – INTERVAL INTENSITY

After enter this program, the TIME display shows “L1”. This indicates the intensity level for the intervals. Use the INTENSITY UP/DOWN buttons to change the intensity then press STOP/ENTER button to enter to confirm.
TIME display shows factory default setting “32:00”. Press INTENSITY UP/DOWN button to adjust the target time and press STOP/ENTER to confirm.
Press START button to start the INTERVAL INTENSITY program. Time counts down to 0, Distance and Calories count up. Dot Matrix display shows the pre-set INTENSITY and MOTION profile. Press INTENSITY UP/DOWN to adjust the resistance and press MOTION UP/DOWN to adjust the motion.

This program has a maximum of 16 segments. If the program length exceeds 16 minutes the time entered will average out over 16 segments

TIME /zone / INTENSITY /level	1st Segment	2nd Segment	3rd Segment	4th Segment	5th Segment	6th Segment	7th Segment	8th Segment
LEVEL								
L1	L1	L9	L9	L1	L1	L9	L9	L1
L2	L2	L10	L10	L2	L2	L10	L10	L2
L3	L3	L11	L11	L3	L3	L11	L11	L3
L4	L4	L12	L12	L4	L4	L12	L12	L4
L5	L5	L13	L13	L5	L5	L13	L13	L5
L6	L6	L14	L14	L6	L6	L14	L14	L6
L7	L7	L15	L15	L7	L7	L15	L15	L7
L8	L8	L16	L16	L8	L8	L16	L16	L8

PROGRAM 6 – INTERVAL MOTION

After enter this program, the time display shows “L1”. This indicates the intensity level for the intervals. Use the INTENSITY UP/DOWN buttons to change the intensity then press STOP/ENTER button to confirm.
TIME display shows factory default setting “32:00”. Press INTENSITY UP/DOWN button to adjust the target time and press STOP/ENTER to confirm.
Press START button to start the INTERVAL MOTION program. Time counts down to 0, Distance and Calories count up. Dot Matrix display shows the pre-set INTENSITY and MOTION profile. Press INTENSITY UP/DOWN to adjust the resistance and press MOTION UP/DOWN to adjust the motion.

This program has a maximum of 16 segments. If the program length exceeds 16 minutes the time entered will average out over 16 segments

TIME /zone / MOTION /level	1st Segment	2nd Segment	3rd Segment	4th Segment	5th Segment	6th Segment	7th Segment	8th Segment
LEVEL								
L1	1	5	5	1	1	5	5	1
L2	2	6	6	2	2	6	6	2
L3	3	7	7	3	3	7	7	3
L4	4	8	8	4	4	8	8	4
L5	5	9	9	5	5	9	9	5
L6	5	10	10	5	5	10	10	5
L7	5	11	11	5	5	11	11	5
L8	5	12	12	5	5	12	12	5

Meijer.com

COMPUTER OPERATION

PROGRAM 7 – ENDURANCE

After enter this program, the TIME display shows “L1”. Press INTENSITY UP/DOWN button to adjust the workout level and press STOP/ENTER to confirm.
TIME display shows factory default setting “32:00”. Press INTENSITY UP/DOWN button to adjust the target time and press STOP/ENTER to confirm.
Press START button to start the ENDURANCE program. Time counts down to 0, Distance and Calories count up. Dot Matrix display shows the pre-set INTENSITY and MOTION profile. Press INTENSITY UP/DOWN to adjust the resistance and press MOTION UP/DOWN to adjust the motion.

This program has a maximum of 16 segments. If the program length exceeds 16 minutes the time entered will average out over 16 segments.

TIME /zone / INTENSITY /level	1st Seg.	2nd Seg.	3rd Seg.	4th Seg.	5th Seg.	6th Seg.	7th Seg.	8th Seg.	9th Seg.	10th Seg.	11th Seg.	12th Seg.	13th Seg.	14th Seg.	15th Seg.	16th Seg.
LEVEL																
L1	L1	L1	L3	L3	L4	L4	L5	L5	L6	L6	L7	L7	L9	L9	L1	L1
L2	L2	L2	L4	L4	L5	L5	L6	L6	L7	L7	L8	L8	L10	L10	L2	L2
L3	L3	L3	L5	L5	L6	L6	L7	L7	L8	L8	L9	L9	L11	L11	L3	L3
L4	L4	L4	L6	L6	L7	L7	L8	L8	L9	L9	L10	L10	L12	L12	L4	L4
L5	L5	L5	L7	L7	L8	L8	L9	L9	L10	L10	L11	L11	L13	L13	L5	L5
L6	L6	L6	L8	L8	L9	L9	L10	L10	L11	L11	L12	L12	L14	L14	L6	L6
L7	L7	L7	L9	L9	L10	L10	L11	L11	L12	L12	L13	L13	L15	L15	L7	L7
L8	L8	L8	L10	L10	L11	L11	L12	L12	L13	L13	L14	L14	L16	L16	L8	L8

TIME /zone / MOTION /level	1st Seg.	2nd Seg.	3rd Seg.	4th Seg.	5th Seg.	6th Seg.	7th Seg.	8th Seg.	9th Seg.	10th Seg.	11th Seg.	12th Seg.	13th Seg.	14th Seg.	15th Seg.	16th Seg.
LEVEL																
L1	1	2	2	2	3	3	3	4	4	4	5	5	5	6	1	1
L2	2	3	3	3	4	4	4	5	5	5	6	6	6	7	2	2
L3	3	4	4	4	5	5	5	6	6	6	7	7	7	8	3	3
L4	4	5	5	5	6	6	6	7	7	7	8	8	8	9	4	4
L5	5	6	6	6	7	7	7	8	8	8	9	9	9	10	5	5
L6	6	7	7	7	8	8	8	9	9	9	10	10	10	11	6	6
L7	7	8	8	8	9	9	9	10	10	10	11	11	11	12	7	7
L8	8	9	9	9	10	10	10	11	11	11	12	12	12	12	8	8

Meijer.com

COMPUTER OPERATION

PROGRAM 8 – WATTS CONTROL

The function of Watts Control program is to allow the user to set a desired workout load (watts). The user's workout load is controlled automatically by increasing or decreasing the resistance as the user changes their stride cadence (RPM). The intensity will be reduced when user increases RPM and the intensity will be increased when the user decreases the RPM.

After enter this program button then press STOP/ENTER to continue the set up procedure.

WATTS display shows factory default setting "110". Press INTENSITY UP/DOWN button to adjust the target Watts and press STOP/ENTER to adjust TIME.

TIME display shows factory default setting "16:00". Press INTENSITY UP/DOWN button to adjust the target Time and press STOP/ENTER to confirm.

Press START button to start the WATTS program. Time counts down to 0, Distance and Calories count up. Dot Matrix display shows the pre-set INTENSITY profile. Press INTENSITY UP/DOWN to adjust the resistance and press MOTION UP/DOWN to adjust the motion.

PROGRAM 9 – TARGET HEART RATE CONTROL PROGRAM

The TARGET HEART RATE CONTROL program is designed to keep the user training at their chosen heart rate level to achieve the proper workout result. A heart rate monitoring device must be used for this program. The equipment provides a standard contact handgrip on the moving handle bar to sense the user heart beat during the workout. The user must hold the contact handgrips on the moving handle bar constantly in order to monitor the user heart rate during the workout. A wireless chest belt transmitter is highly recommended for this program.

IMPORTANT: The console software will calculate the user's SAFE MAXIMUM HEART RATE based on the formula: (220pbm-AGE). User's are encouraged to consult with a doctor or personal Training consultant to more accurately estimate their SAFE MAXIMUM HEART RATE in order to workout safely.

PULSE display shows the calculated TARGET HEART RATE based on the user age setting from the above step. The TARGET HEART RATE = 85% MAXIMUM SAFE HEART RATE. Press INTENSITY UP/DOWN button to adjust the target heart rate then press the STOP/ENTER bottom to confirm.

After adjust the TARGET HEART RATE, the TIME display shows factory default setting "32:00". Press INTENSITY UP/DOWN button to adjust the target time and press STOP/ENTER to confirm.

Press the START button to start the 3 minute WARM UP. The purpose of warm up program is to bring the user's heart rate to 65% of the MAXIMUM SAFE HEART RATE. Time counts down from "3.00" to "0:00". Intensity Level Profile displays "WARM UP" 3 times.

During the WARM UP, if the actual heart rate is less than 65% of the user's MAXIMUM SAFE HEART RATE, the intensity level will be increased by 1 level every 30 seconds. If the actual heart rate reaches 65% MAXIMUM SAFE HEART RATE twice within the warm up, the HEART RATE CONTROL program will start after finished 3minute WARM UP.

If user's actual hear rate fails to reach 65% of MAXIMUM SAFE HEART RATE during the warm up, the user will be placed into a 2nd or 3rd (if necessary) 3 minute warm up program. If user's actual heart rate fails to reach 65% of the MAXIMUM SAFE HEART RATE after the 3rd 3 warm up program, the INTENSITY LEVEL PROFILE dot matrix will display "FAIL" then return to POWER ON status in 10 seconds.

Once the user successfully enters the HEART RATE CONTROL program, the computer will actively adjust the motion level and intensity level to keep the users at the TARGET HEART RATE. If the user is consistently below the TARGET HEART RATE, the MOTION LEVEL will increase 1 level every 30 seconds until reach LEVEL 12 and then the INTENSITY LEVEL will increase 1 level every 30 seconds. If the user reaches and exceeds the TARGET HEART RATE, the MOTION LEVEL will decrease 1 level every 30 seconds until level 1 and then the INTENSITY LEVEL will decrease 1 level every 30 seconds. The program will continue until the time runs out. If the user's

heart rate continues to exceed the TARGET HEART RATE for 3 minutes, or the time counts down to "0:00", the heart rate control program will stop and start the 1 minute COOL DOWN function. Time counts down from "1:00" and INTENSITY LEVEL at level 1 and MOTION LEVEL at level 1.

Meijer.com

COMPUTER OPERATION

P10: CUSTOMER COURSE

When the user selects P10 CUSTOM program and press STOP/ENTER button, C1 will display and flash on the LCD. The program can allow each user to create 5 individual custom programs and store the settings for repeated workouts. To select the program from C1 to C5, press the INTENSITY UP/DOWN button. Press STOP/ENTER button and hold it for 3 seconds to confirm the selection and then continues to set up.

When the users selects one custom program and enter to set up, the user comes into the INTENSITY WATT, MOTION LEVEL and TIME setting mode. In the display the first minute is flashing. Use INTENSITY UP/DOWN button to adjust the INTENSITY WATT and use MOTION UP/DOWN button to adjust MOTION LEVEL. Then press the STOP/ENTER button to reserve the setting and continue to next minute setting of the program, etc.

After setting up above item, press the STOP/ENTER button and hold it for 3 seconds to confirm ,and then press START button to activate status. The maximum workout time of each user program is 60 minutes.

Main Individual custom program

Press the START button again to begin the exercise program. The LCD display will show the INTENSITY WATT, MOTION LEVEL and TIME status as the user set it.

Press INTENSITY UP/DOWN to adjust the resistance and press MOTION UP/DOWN to adjust the motion.

The target time of the program will count down from the preset time. The DISTANCE, CALORIES display will count up from 0.

To pause the program while exercising, press the STOP/ENTER button. To quit the program, press the STOP/ENTER button twice. At the end of the program when the target has been achieved, the computer will beep then return POWER ON status.

Heart Rate Operation

The AGILE DMT X2 comes with EKG hand pulse sensors which can be found on the handlebars. To operate pulse rate function, place the palms of your hands over the sensors. It will take a few seconds for your pulse rate to be displayed on the console. To keep monitoring, keep gripping the sensors, if the readings are intermittent you may not have full contact with the sensors or not enough of your palm on the sensor. Remove your hand and place it over the sensor again.

Heart Rate Training

To maximize your results from training it is essential to monitor the intensity of your workout through your heart rate.

It is imperative that you accurately determine the target pulse rate within which to train in order that you may improve your fitness at a safe, comfortable and sustainable level.

The following table on the next page is a rough guide to determine the level at which you should be exercising based upon your maximum heart rate (MHR).

Meijer.com

COMPUTER OPERATION

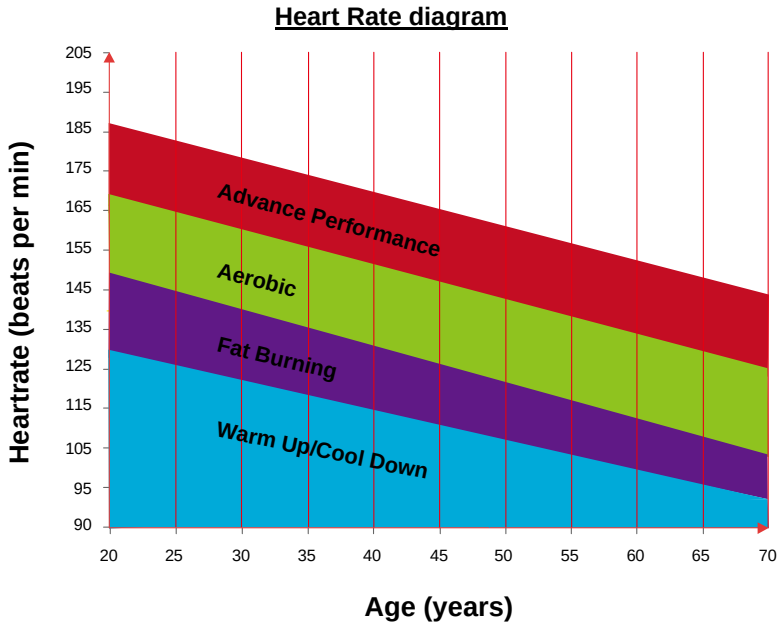

You can calculate the target-heartrate for your training as follows:
Maximum heartrate = 220 minus age
For the different trainingtargets you should train with the following percentage of your maximum heartrate:

Health/Fat Burning:	**65 – 75% of your max. heartrate**
Fitness/Bodyshaping:	**75 – 85% of your max. heartrate**
Performance:	**85 - 95% of your max. heartrate**

Example:
You are 25 years old and want to train for the target Fitness:
220 – 25 = 195
75% of 195 = 146,25
85% of 195 = 165,75
Your target-heartrate should be between 146 and 166 beats per minute.

This information is for your reference only. To determine your individual training intensity or in case you should have health restrictions please consult your physician before starting exercising.

Meijer.com

WARRANTY

LIMITED HOME USE WARRANTY

Warranty Coverage: EVO Fitness and Smooth Fitness, Inc. ("Smooth Fitness") warrants to the original owner that each new product to be free from defects in workmanship and material, under normal use and conditions.

Period of Coverage: The Warranty on this product runs from the date of original purchase using the following schedule:

Model Name	Frame	Parts & Electronics	Labor
AGILE DMT X2	Lifetime	5 years	1 year

Labor: Smooth Fitness will reimburse for labor costs for One (1) year. Smooth Fitness reserves the right to either:
Hire and reimburse an independent service technician who will come into the home for the repair,
OR
In the event that there is not an available certified Smooth Fitness service technician, Smooth will send the part directly to the consumer and will pay $75 US per occurrence for the labor costs of such repair. If multiple repair attempts must be made for one reported problem, Smooth will only reimburse once per occurrence.

Smooth Fitness reserves the right to inspect damaged parts for misuse. Your Original Receipt is proof of purchase and should be kept with the product manual. You may be required to show proof of purchase prior to warranty service being initiated.

Remedy Provided by Smooth Fitness: Smooth Fitness will provide a replacement part free of charge if a defect is found during the Warranty period. Smooth Fitness may at its discretion, choose to provide any of following parts or repair options. In the event that a part is determined in need of replacement, upon receipt of the part by Smooth Fitness, Smooth Fitness may send out the part by UPS ground or another such carrier directly to the customer's home. The customer is responsible for the cost of sending the part to Smooth Fitness.

For the 9.25X and 9.45 Model Only: This warranty covers all parts including frame, electronics and wear parts for a lifetime. If Smooth Fitness in its sole discretion determines that the treadmill cannot or should not be repaired, it may decide to purchase the unit for the residual value in accordance with the following: 25% of retail purchase price after 5 years, 15% after 10 years, 5% after 15 years.

Any redemption may be by repair or replacement of the affected parts and/or product at the sole discretion of Smooth Fitness, by personnel approved by Smooth Fitness.

Parts repaired or replaced pursuant to this Warranty shall be warranted for the unexpired portion of the Warranty applying to the original product. Any technical advice furnished before or after delivery in regard to the use or application of Smooth Fitness products is furnished without charge and on the basis that it represents Smooth Fitness' best judgment under the circumstances but that the advice is used at your sole risk.

Procedure for Obtaining Your Remedy Under This Warranty: To obtain service on a Smooth Fitness product, call Smooth Fitness. In the instance that service is not available in an area, Smooth Fitness, at its discretion, can either 1) find a service technician in your area to perform warranty service, 2) have a local dealer perform warranty service, or 3) send the warranty parts to you and reimburse as described above. To help the technician assist you, please have the following information ready:

- **Model name or number from the cover of the manual;**
- **Serial number located on the frame of the unit; and**
- **The part description and the order number.**

Limitations on Warranty: This Warranty will only apply to the original end user. This Warranty does not cover wear and tear (except the 9.25X treadmill), any problems, damages or failures that are caused by accident, improper assembly, failure to observe cautionary labels on the product, failure to operate the product correctly, power grid failures or spikes from your local electricity provider, abuse or freight damage. Smooth Fitness does not warrant against any damage or defects that may result from repair or alterations made to the product by an unauthorized repair facility.

This Warranty shall terminate if you sell or otherwise transfer this product. This Warranty does not apply to any product shipped or handled outside of the United States or Canada. This Warranty does not apply if the product is used as a rental product or in commercial use. Consequential and incidental damages are not recoverable under this Warranty. (Some states do not allow the exclusion or limitation of incidental or consequential damages, so the above limitation or exclusion may not apply to you.)

THIS WARRANTY IS EXPRESSLY IN LIEU OF ALL OTHER EXPRESS WARRANTIES. ALL IMPLIED WARRANTIES, INCLUDING WARRANTIES OF MERCHANTABILITY OR FITNESS FOR ANY PARTICULAR PURPOSE, ARE LIMITED IN DURATION TO ONE (1) YEAR FROM THE EFFECTIVE DATE OF THIS WARRANTY. SMOOTH FITNESS IS NOT LIABLE FOR CONSEQUENTIAL OR INCIDENTAL DAMAGES RESULTING FROM ANY DEFECT IN PARTS NOR FOR ANY BREACH OF EXPRESS OR IMPLIED WARRANTIES. SMOOTH FITNESS' SOLE LIABILITY UNDER THIS WARRANTY IS LIMITED TO THE TERMS DESCRIBED IN THIS FORM. THIS WARRANTY GIVES YOU SPECIFIC LEGAL RIGHTS, AND YOU MAY ALSO HAVE OTHER RIGHTS WHICH VARY FROM STATE TO STATE.

FORM WS-1 (rev. 08/2005)

Meijer.com

Smooth Fitness
780 5th Ave
King of Prussia, PA 19406

Toll Free Customer Service:
1.888.800.1167

Website:
www.smoothfitness.com